DO NOT SCALE | DIMENSIONS IN MM.

C.A.D. FILE CODE S.C343371.0.SH1

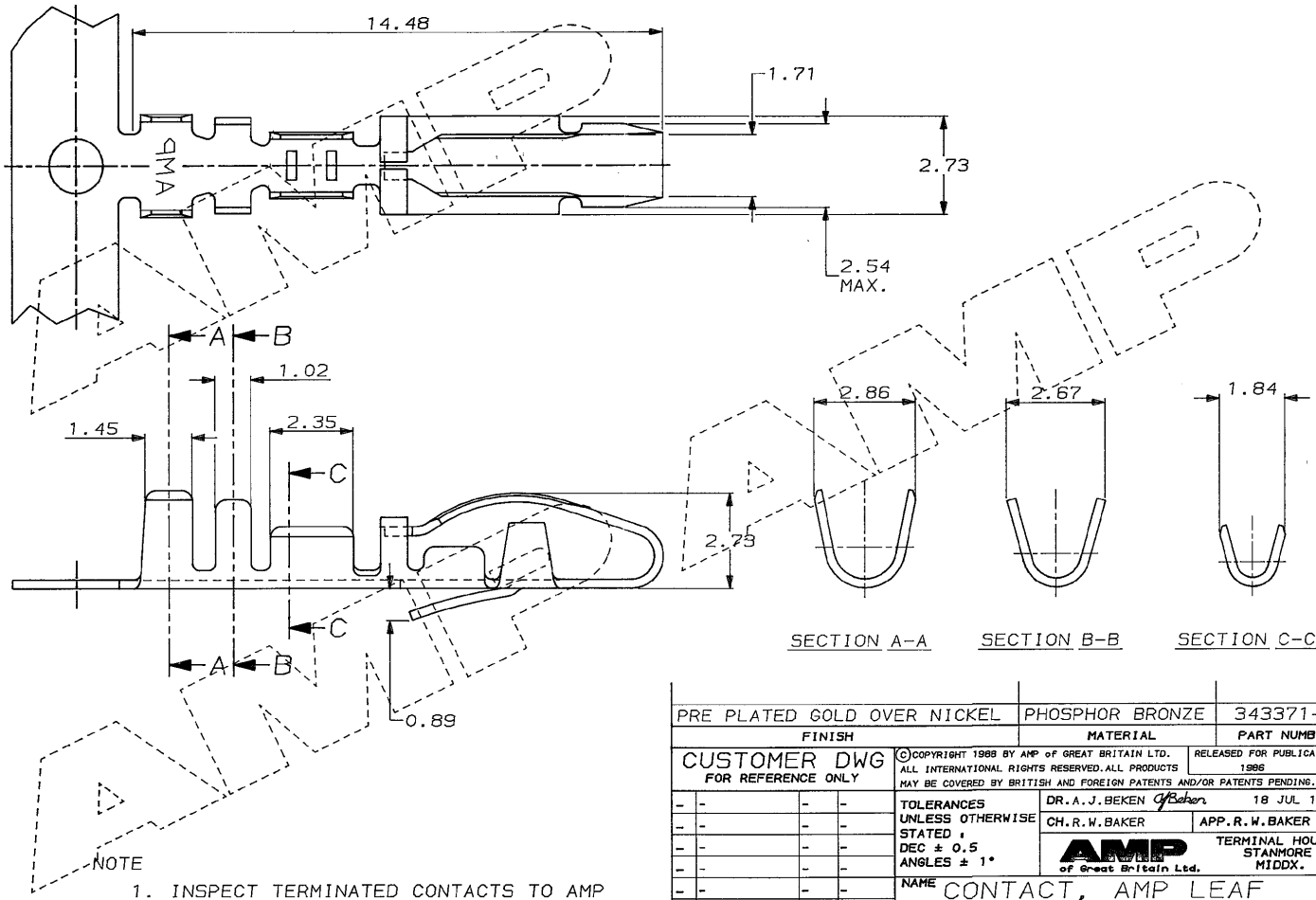

NOTE

1. INSPECT TERMINATED CONTACTS TO AMP APPLICATION SPECIFICATION 114-9003

PRE PLATED GOLD OVER NICKEL	PHOSPHOR BRONZE	343371-1
FINISH	MATERIAL	PART NUMBER

CUSTOMER DWG
FOR REFERENCE ONLY

© COPYRIGHT 1988 BY AMP of GREAT BRITAIN LTD. ALL INTERNATIONAL RIGHTS RESERVED. ALL PRODUCTS MAY BE COVERED BY BRITISH AND FOREIGN PATENTS AND/OR PATENTS PENDING.

RELEASED FOR PUBLICATION 1986

TOLERANCES UNLESS OTHERWISE STATED : DEC ± 0.5 ANGLES ± 1°

DR. A.J. BEKEN 18 JUL 1988

CH. R.W. BAKER | APP. R.W. BAKER

AMP of Great Britain Ltd. | TERMINAL HOUSE STANMORE MIDDX.

NAME CONTACT, AMP LEAF

REV	APPROVED	ECN	DATE
0	A.J. BEKEN	C5194	16-2-89

SCALE	LOC	SIZE	DWG. No.	REV	SHEET
10/1	E	A3	C343371	0	1/1

FORMAT 22/05/85

Downloaded from Elcodis.com electronic components distributor