REVISION S

QMS-XXX-XX.XX-XX-D-X-XXX

DO NOT SCALE FROM THIS PRINT

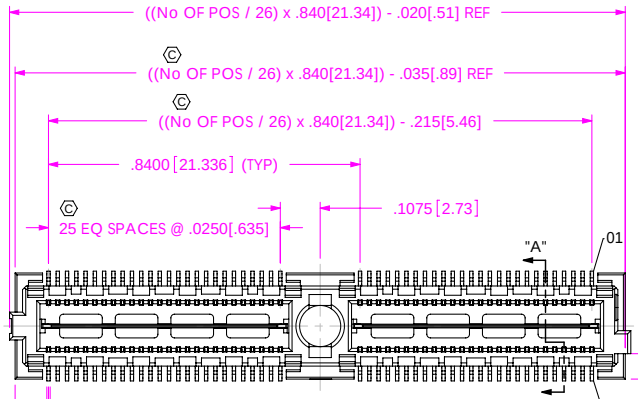

FIG. 1
-05.75 & -06.75 LEAD STYLE
(QMS-052-06.75-X-D-A SHOWN)

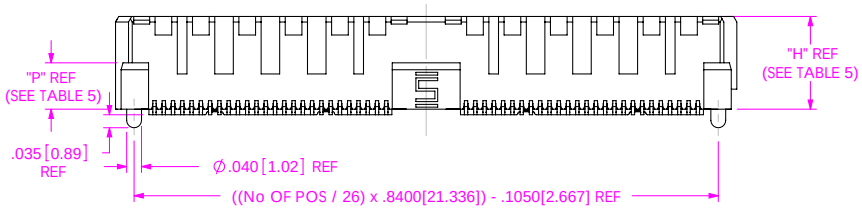

No OF POSITIONS
-026, -052, -078,
-104, * -130
(PER ROW)

LEAD STYLE
-05.75 (SEE FIG. 1)
-06.75 (SEE FIG. 1)
-09.75 (SEE FIG. 4, SHEET 3)

PLATING SPECIFICATION
-L: LIGHT GOLD
(USE T-1M19-XX.XX-L, SEE TABLE 5)
(AVAILABLE ON -05.75 & -06.75 LEAD STYLE ONLY)
-H: HEAVY GOLD
(USE T-1M19-XX.XX-H, SEE TABLE 5)
(AVAILABLE ON -05.75 & -06.75 LEAD STYLE ONLY)
-S: SELECTIVE GOLD
(USE T-1M19-XX.XX-S, SEE TABLE 5)
(AVAILABLE ON -09.75 LEAD STYLE ONLY)
-SL: SELECTIVE LIGHT GOLD
(USE T-1M19-XX.XX-SL, SEE TABLE 5)
(AVAILABLE ON -09.75 LEAD STYLE ONLY)

ROW SPECIFICATION
-D: DOUBLE

OPTION
-A: ALIGNMENT PIN
-GP: GUIDE POSTS
(SEE FIG. 3, SHEET 2)
(AVAILABLE ON -05.75 & -06.75 LEAD STYLES ONLY)
-K: KAPTON PAD
(SEE FIG. 2, SHEET 2)
(OPTIONS NOT AVAILABLE IN COMBINATION WITH -PXX OR -RFX)

END OPTION
-PC4: POWER COMBO 4 (.062" THICK BOARD)
(SEE FIG. 5, SHEET 4)
-PC8: POWER COMBO 8 (.062" THICK BOARD)
(SEE FIG. 5, SHEET 4)
S -PT4: POWER COMBO 4 (.093" THICK BOARD)
(SEE FIG. 5, SHEET 4)
S -PT8: POWER COMBO 8 (.093" THICK BOARD)
(SEE FIG. 5, SHEET 4)
-RF1: 1 RF POS PER END
(SEE FIG. 6, SHEET 5)
-RF2: 2 RF POS PER END
(SEE FIG. 7, SHEET 5)
-RT1: 1 RT POS PER END
(SEE FIG. 8, SHEET 6)

(-PXX & -RFX NOT AVAILABLE IN COMBINATION WITH -A, -GP, OR -K)
(END OPTION APPLIES TO BOTH ENDS, COMBINATIONS ARE NOT AVAILABLE)
(-PXX & -RFX AVAILABLE IN POS -026, -052, & -078 ONLY)
(-RFX & -RT1 AVAILABLE ON -05.75 LEAD STYLE ONLY)
(-RT1 AVAILABLE IN -026, -052, -078, & -104 POS WITH -A OPTION ONLY)
(-PXX AVAILABLE ON -05.75 & -06.75 LEAD STYLES ONLY)

*** = NOT TOOLED**

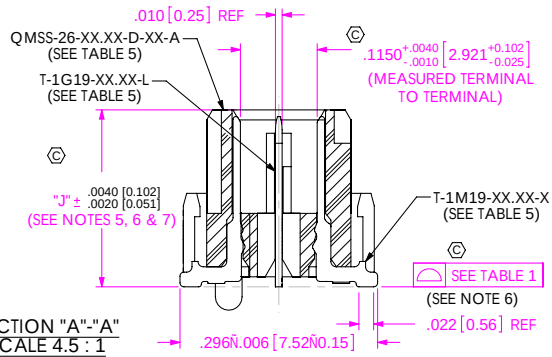

SECTION "A"-"A"
SCALE 4.5 : 1

TABLE 5									
LEAD STYLE	"H"	"J"	"P"	QMS BODY	QMS STACKER BODY	TERMINAL	GROUND PLANE	MATED TO QFS-XX.XX	MATED HEIGHT
-05.75	.212 [5.38]	.2268 [5.761]	.085 [2.16]	QMSS-26-05.75-D-XX-A	N/A	T-1M19-05.75-XX	T-1G19-05.75-L	QFS-04.25	.394[10.00] REF
								QFS-06.25	.472[12.00] REF
-06.75	.250 [6.35]	.2650 [6.731]	.125 [3.18]	QMSS-26-06.75-D-XX-A	N/A	T-1M19-06.75-XX	T-1G19-06.75-L	QFS-04.25	.433[11.00] REF
								QFS-06.25	.512[13.00] REF
-09.75	.363 [9.35]	.3830 [9.728]	.085 [2.16]	QMSS-26-05.75-D-XX	OTSH-26-01-D-XX-A	T-1M19-09.75-XX	T-1G19-09.75-L	QFS-04.25	.551[14.00] REF
								QFS-06.25	.630[16.00] REF

TABLE 1		
No OF POSITIONS	No OF BANKS	COPLANARITY
-026 AND -054	1 AND 2	.004[.10]
-078 THRU *-130	3 THRU 5	.006[.15]

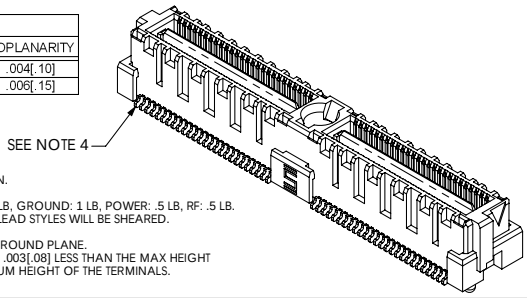

NOTES:

1. Ⓒ REPRESENTS A CRITICAL DIMENSION.
2. BURR ALLOWANCE: .0015 MAX.
3. MINIMUM PUSHOUT FORCE: SIGNAL: .5 LB, GROUND: 1 LB, POWER: .5 LB, RF: .5 LB.
4. ALL TERMINALS ON THE -05.75 & -06.75 LEAD STYLES WILL BE SHEARED.
5. MAX VARIANCE OF .002.
6. DIMENSION APPLIES TO CONTACTS & GROUND PLANE.
7. GROUND PLANE PRESS HEIGHT MUST BE .003[.08] LESS THAN THE MAX HEIGHT OR .001[.03] GREATER THAN THE MINIMUM HEIGHT OF THE TERMINALS.
8. PARTS TO BE PACKAGED IN TRAYS.

UNLESS OTHERWISE SPECIFIED, DIMENSIONS ARE IN INCHES.
TOLERANCES ARE:
DECIMALS: .XX: ±.01 [.3]; .XXX: ±.005 [.13]; .XXXX: ±.0020 [.051]
ANGLES: 2 °

PROPRIETARY NOTE
THIS DOCUMENT CONTAINS INFORMATION CONFIDENTIAL AND PROPRIETARY TO SAMTEC, INC. AND SHALL NOT BE REPRODUCED OR TRANSFERRED TO OTHER DOCUMENTS OR DISCLOSED TO OTHERS OR USED FOR ANY PURPOSE OTHER THAN THAT WHICH IT WAS OBTAINED WITHOUT THE EXPRESSED WRITTEN CONSENT OF SAMTEC, INC.

samtec
520 PARK EAST BLVD, NEW ALBANY, IN 47150
PHONE: 812-944-6733 FAX: 812-948-5047
e-Mail: info@SAMTEC.com code: 55322

MATERIAL: DO NOT SCALE DRAWING SHEET SCALE: 1:0.4
INSULATOR: LCP, COLOR: BLACK
TERMINAL & GROUND PLANE:
PHOS BRONZE

DESCRIPTION: .635mm DOUBLE ROW TERMINAL STRIP

DWG. NO. QMS-XXX-XX.XX-XX-D-X-XXX

BY: E.L.S. 6/09/2003 SHEET 1 OF 6

F:\DWG\MISC\MKTG\QMS-XXX-XX.XX-XX-D-X-XXX-MKT.SLDDRW

Downloaded from Elcodis.com electronic components distributor

REVISION S

IN-PROCESS 1

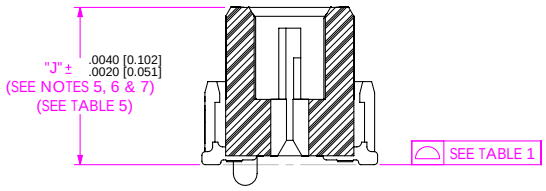

TERMINAL DETAILS

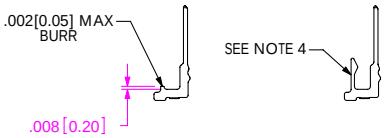

FIG. 3

-GP: GUIDE POST OPTION
(QMS-052-06.75-X-D-A-GP SHOWN)
(AVAILABLE ON -05.75 & -06.75 LEAD STYLES ONLY)

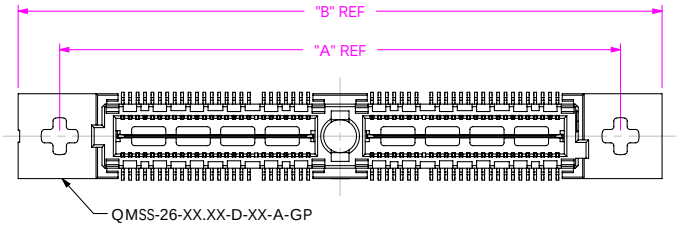

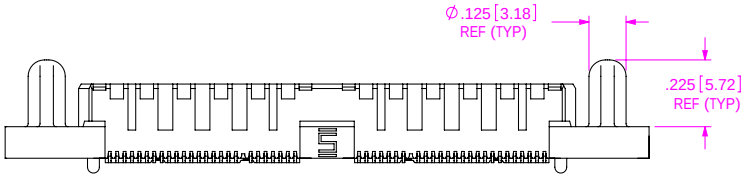

FIG. 2

-K: KAPTON PAD OPTION (USE K-500-300)
(QMS-052-06.75-X-D-A-K SHOWN)

TABLE 9	
LEAD STYLE	"Q"
-05.75	.233 [5.91]
-06.75	.271 [6.88]
-09.75	.389 [9.88]

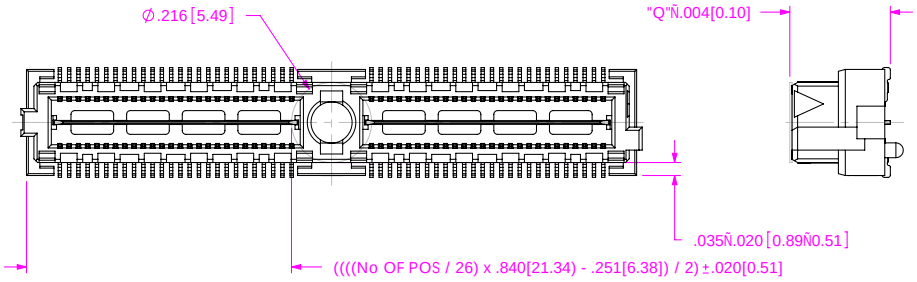

F:\DWG\MISC\MKTG\QMS-XXX-XX.XX-XX-D-X-XXX-MKT.SLDDRW

TABLE 2		
ASSEMBLY	"A"	"B"
QMS-026-XX-X-D-A-GP	1.050[26.67]	1.330[33.78]
QMS-052-XX-X-D-A-GP	1.890[48.00]	2.170[55.12]
QMS-078-XX-X-D-A-GP	2.730[69.34]	3.010[76.45]
QMS-104-XX-X-D-A-GP	3.570[90.68]	3.850[97.79]
* QMS-130-XX-X-D-A-GP	4.410[112.01]	4.690[119.13]

*** NOT TOOLED**

PROPRIETARY NOTE
THIS DOCUMENT CONTAINS INFORMATION CONFIDENTIAL AND PROPRIETARY TO SAMTEC, INC. AND SHALL NOT BE REPRODUCED OR TRANSFERRED TO OTHER DOCUMENTS OR DISCLOSED TO OTHERS OR USED FOR ANY PURPOSE OTHER THAN THAT WHICH IT WAS OBTAINED WITHOUT THE EXPRESSED WRITTEN CONSENT OF SAMTEC, INC.

DO NOT SCALE DRAWING

SHEET SCALE: 1:0.4

520 PARK EAST BLVD, NEW ALBANY, IN 47150
PHONE: 812-944-6733 FAX: 812-948-5047
e-Mail: info@SAMTEC.com code: 55322

DESCRIPTION:
.635mm DOUBLE ROW TERMINAL STRIP

DWG. NO.
QMS-XXX-XX.XX-XX-D-X-XXX

BY: E.L.S. 6/09/2003 SHEET 2 OF 6

Downloaded from Elcodis.com electronic components distributor

REVISION S

FIG. 4
-09.75 LEAD STYLE
(QMS-052-09.75-X-D-A SHOWN)
(SAME AS FIG. 1, EXCEPT AS SHOWN)

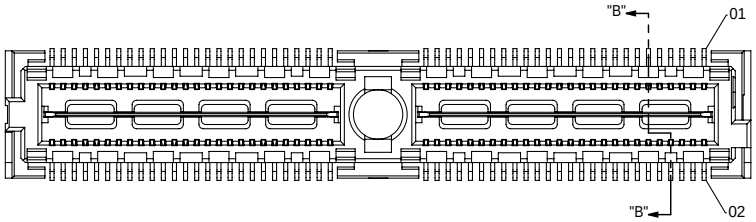

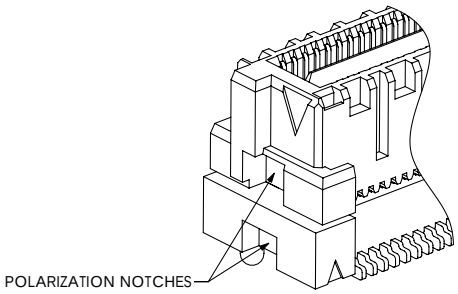

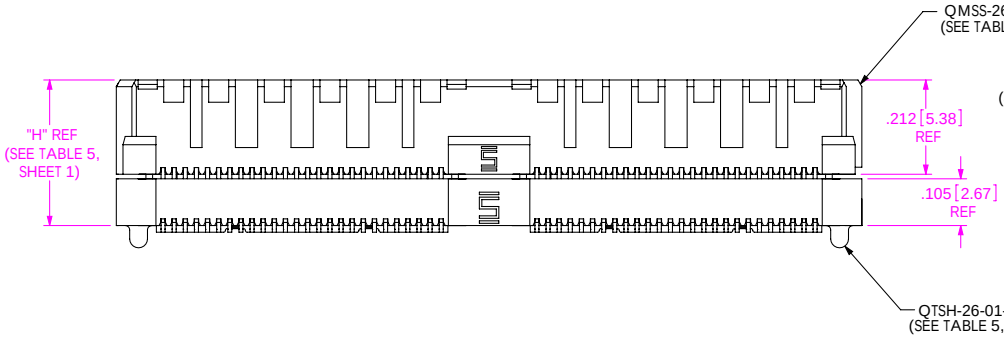

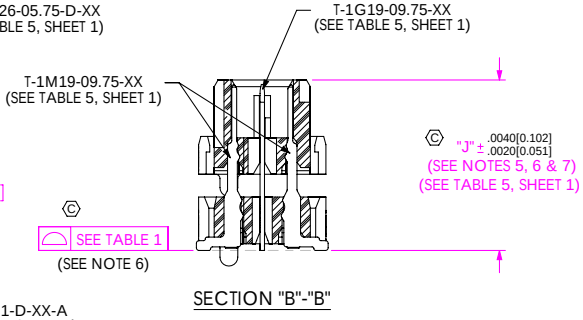

PROPRIETARY NOTE

THIS DOCUMENT CONTAINS INFORMATION CONFIDENTIAL AND PROPRIETARY TO SAMTEC, INC. AND SHALL NOT BE REPRODUCED OR TRANSFERRED TO OTHER DOCUMENTS OR DISCLOSED TO OTHERS OR USED FOR ANY PURPOSE OTHER THAN THAT WHICH IT WAS OBTAINED WITHOUT THE EXPRESSED WRITTEN CONSENT OF SAMTEC, INC.

DO NOT SCALE DRAWING

SHEET SCALE: 3:1

520 PARK EAST BLVD, NEW ALBANY, IN 47150
PHONE: 812-944-6733 FAX: 812-948-5047
e-Mail: info@SAMTEC.com code: 55322

DESCRIPTION:
.635mm DOUBLE ROW TERMINAL STRIP

DWG. NO.
QMS-XXX-XX.XX-XX-D-X-XXX

BY: E.L.S. 6/09/2003 SHEET 3 OF 6

F:\DWG\MISC\MKTG\QMS-XXX-XX.XX-XX-D-X-XXX-MKT.SLDDRW

Downloaded from Elcodis.com electronic components distributor

REVISION S

FIG. 5 -PXX OPTION

POWER COMBO OPTIONS
QMS-052-06.75-X-D-PC4 SHOWN
(SAME AS FIG. 1, UNLESS OTHERWISE STATED)
[NOT AVAILABLE WITH -A, -GP OR -K OPTION, AVAILABLE ON LEAD STYLES -05.75 & -06.75 ONLY]
(AVAILABLE ON -026, -052 & -078 POSITIONS ONLY)

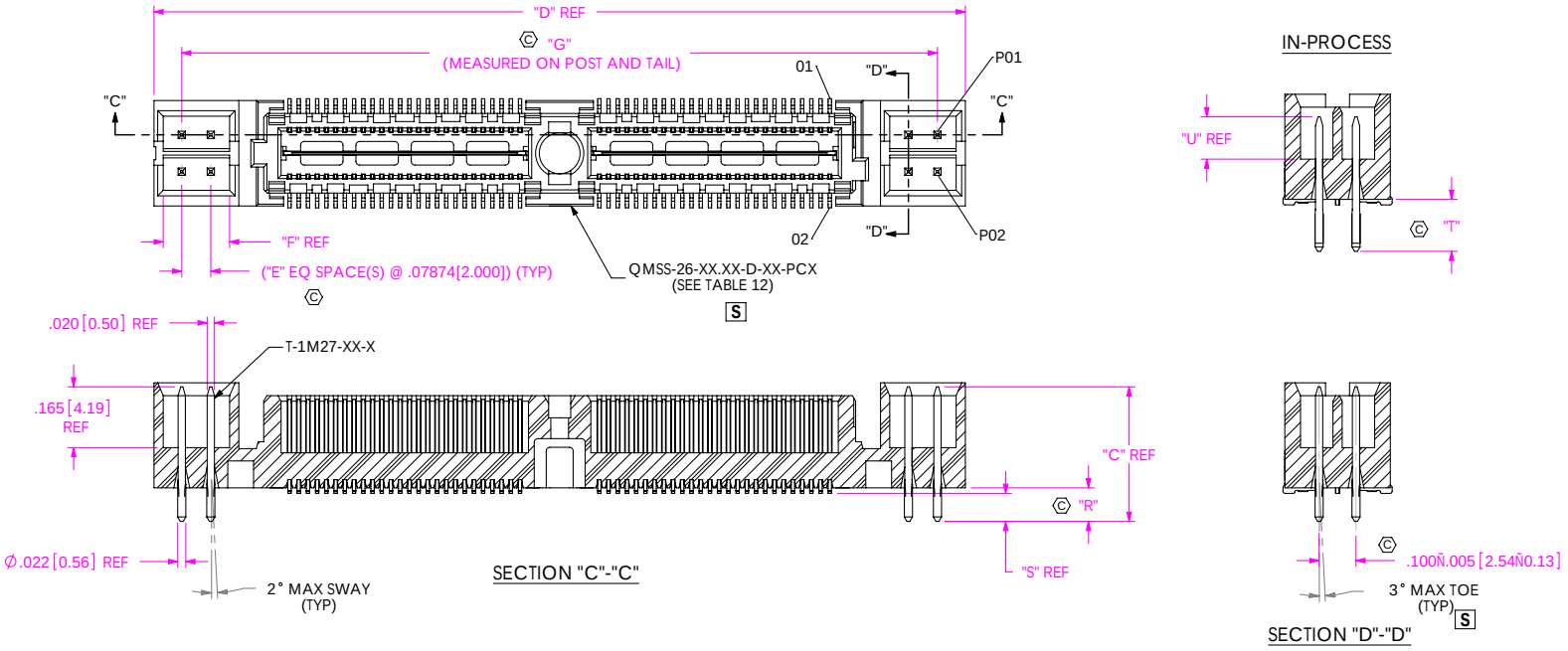

TABLE 10				
ASSEMBLY	"D"	"E"	"F"	"G"
QMS-026-XX.XX-X-D-X-PX4	1.360[34.54]	1	.180[4.57]	1.209[30.71]
QMS-026-XX.XX-X-D-X-PX8	1.675[42.55]	3	.337[8.56]	1.524[38.71]
QMS-052-XX.XX-X-D-X-PX4	2.200[55.88]	1	.180[4.57]	2.049[52.04]
QMS-052-XX.XX-X-D-X-PX8	2.515[63.88]	3	.337[8.56]	2.364[60.05]
QMS-078-XX.XX-X-D-X-PX4	3.040[77.22]	1	.180[4.57]	2.889[73.38]

TABLE 12		
LEAD STYLE	POWER OPTION	BODY
-06.75	PX4	QMSS-26-06.75-D-XX-PC4
-06.75	PX8	QMSS-26-06.75-D-XX-PC8
-05.75	PX4	QMSS-26-05.75-D-XX-PC4
-05.75	PX8	QMSS-26-05.75-D-XX-PC8

TABLE 11							
LEAD STYLE	POWER OPTION	TERMINAL	"C"	"R"	"S"	"T"	"U"
-06.75	PCX	T-1M27-01-S	.365[9.27]	.091[2.31]	.076[1.93]	.132[3.35]	.124[3.15]
-06.75	PTX	T-1M27-03-S	.400[10.16]	.126[3.20]	.111[2.82]	.132[3.35]	.159[4.04]
-05.75	PCX	T-1M27-02-S	.326[8.28]	.091[2.31]	.076[1.93]	.172[4.37]	.079[2.01]
-05.75	PTX	T-1M27-01-S	.365[9.27]	.126[3.20]	.111[2.82]	.172[4.37]	.118[3.00]

F:\DWG\MISC\MKTG\QMS-XXX-XX.XX-XX-D-X-XXX-MKT.SLDDRW

PROPRIETARY NOTE
THIS DOCUMENT CONTAINS INFORMATION CONFIDENTIAL AND PROPRIETARY TO SAMTEC, INC. AND SHALL NOT BE REPRODUCED OR TRANSFERRED TO OTHER DOCUMENTS OR DISCLOSED TO OTHERS OR USED FOR ANY PURPOSE OTHER THAN THAT WHICH IT WAS OBTAINED WITHOUT THE EXPRESSED WRITTEN CONSENT OF SAMTEC, INC.

DO NOT SCALE DRAWING

SHEET SCALE: 1:0.4

samtec
520 PARK EAST BLVD, NEW ALBANY, IN 47150
PHONE: 812-944-6733 FAX: 812-948-5047
e-Mail: info@SAMTEC.com code: 55322

DESCRIPTION:
.635mm DOUBLE ROW TERMINAL STRIP

DWG. NO.
QMS-XXX-XX.XX-XX-D-X-XXX

BY: E.L.S. 6/09/2003 SHEET 4 OF 6

Downloaded from Elcodis.com electronic components distributor

REVISION S

FIG. 6 -RF1 OPTION

QMS-052-05.75-X-D-RF1 SHOWN
(SAME AS FIG. 1, UNLESS OTHERWISE STATED)
[NOT AVAILABLE WITH -A OR -GP OPTION, AVAILABLE ON LEAD STYLE -05.75 ONLY]
(AVAILABLE ON -026, -052 & -078 POSITIONS ONLY)

TABLE 7

ASSEMBLY	QMSS-26-05.75-D-XX-RFX	"K"	"L"
QMS-026-05.75-X-D-RF1	QMSS-26-05.75-D-01-RF1	1.425[36.20]	1.153[29.29]
QMS-026-05.75-X-D-RF2	QMSS-26-05.75-D-01-RF2	1.925[48.90]	1.653[41.99]
QMS-052-05.75-X-D-RF1	QMSS-26-05.75-D-02-RF1	2.265[57.53]	1.993[50.62]
QMS-052-05.75-X-D-RF2	QMSS-26-05.75-D-02-RF2	2.765[70.23]	2.493[63.32]
QMS-078-05.75-X-D-RF1	QMSS-26-05.75-D-03-RF1	3.105[78.87]	2.833[71.96]
QMS-078-05.75-X-D-RF2	QMSS-26-05.75-D-03-RF2	3.605[91.57]	3.333[84.66]

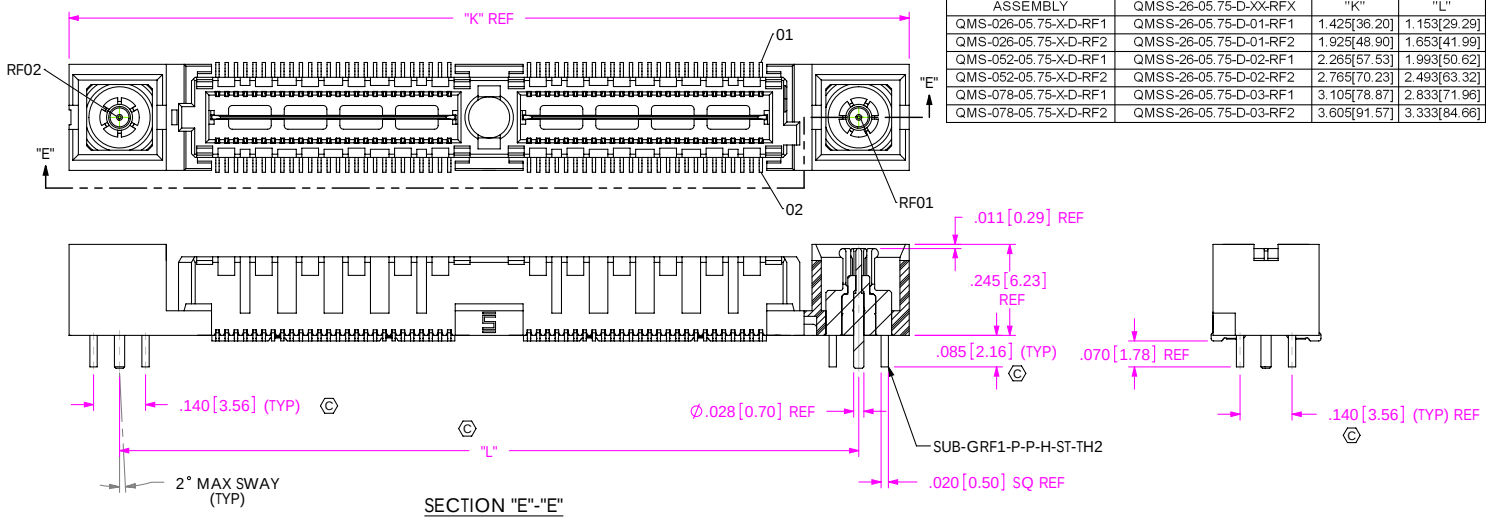

SECTION "E"-"E"

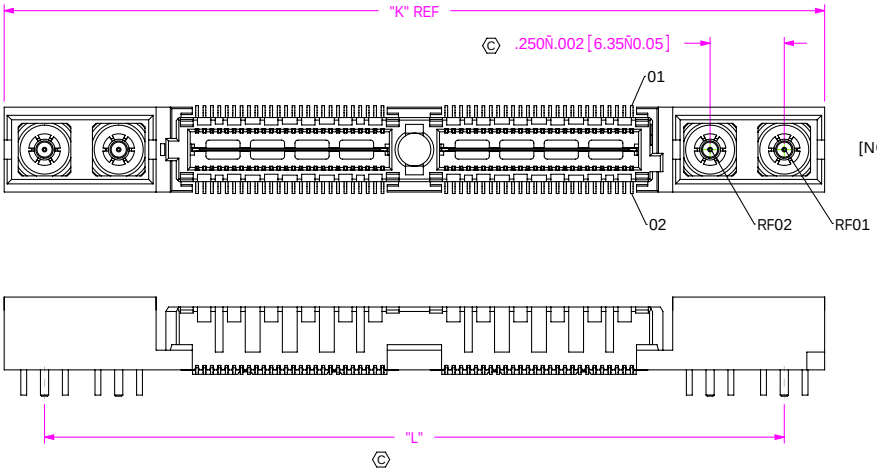

FIG. 7 -RF2 OPTION

QMS-052-05.75-X-D-RF2 SHOWN
(SAME AS FIG. 6, UNLESS OTHERWISE STATED)
[NOT AVAILABLE WITH -A OR -GP OPTION, AVAILABLE ON LEAD STYLE -05.75 ONLY]
(AVAILABLE ON -026, -052 & -078 POSITIONS ONLY)

F:\DWG\MISC\MKTG\QMS-XXX-XX.XX-XX-D-X-XXX-MKT.SLDDRW

PROPRIETARY NOTE

THIS DOCUMENT CONTAINS INFORMATION CONFIDENTIAL AND PROPRIETARY TO SAMTEC, INC. AND SHALL NOT BE REPRODUCED OR TRANSFERRED TO OTHER DOCUMENTS OR DISCLOSED TO OTHERS OR USED FOR ANY PURPOSE OTHER THAN THAT WHICH IT WAS OBTAINED WITHOUT THE EXPRESSED WRITTEN CONSENT OF SAMTEC, INC.

DO NOT SCALE DRAWING

SHEET SCALE: 1:0.4

520 PARK EAST BLVD, NEW ALBANY, IN 47150
PHONE: 812-944-6733 FAX: 812-948-5047
e-Mail: info@SAMTEC.com code: 55322

DESCRIPTION: .635mm DOUBLE ROW TERMINAL STRIP

DWG. NO. QMS-XXX-XX.XX-XX-D-X-XXX

BY: E.L.S. 6/09/2003 SHEET 5 OF 6

Downloaded from Elcodis.com electronic components distributor

REVISION S

FIG. 8
-RT1 OPTION
QMS-052-05.75-X-D-A-RT1 SHOWN
(SAME AS FIG. 1, UNLESS OTHERWISE STATED)
[NOT AVAILABLE WITH -GP, -PCX OR -RFX OPTION, AVAILABLE ON LEAD STYLE -05.75 ONLY]
(AVAILABLE ON -026, -052, -078, & -104 POSITIONS WITH -A OPTION ONLY)

TABLE 8			
ASSEMBLY	QMSS-26-05.75-D-XX-A-RTX	"M"	"N"
QMS-026-05.75-X-D-A-RT1	QMSS-26-05.75-D-01-A-RT1	1.425[36.20]	1.153[29.29]
QMS-052-05.75-X-D-A-RT1	QMSS-26-05.75-D-02-A-RT1	2.265[57.53]	1.993[50.62]
QMS-078-05.75-X-D-A-RT1	QMSS-26-05.75-D-03-A-RT1	3.105[78.87]	2.833[71.96]
QMS-104-05.75-X-D-A-RT1	QMSS-26-05.75-D-04-A-RT1	3.945[100.20]	3.673[93.29]

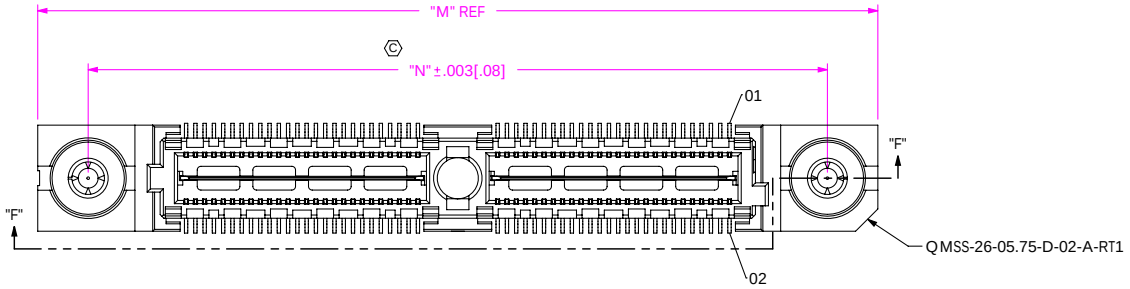

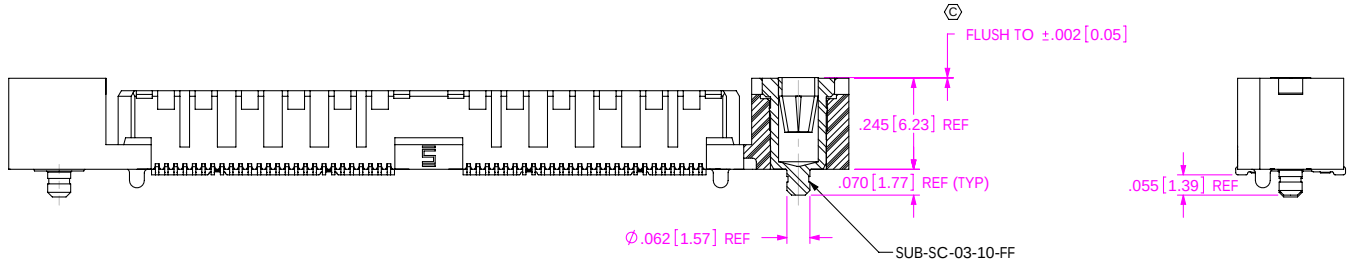

SECTION "F"-"F"

PROPRIETARY NOTE

THIS DOCUMENT CONTAINS INFORMATION CONFIDENTIAL AND PROPRIETARY TO SAMTEC, INC. AND SHALL NOT BE REPRODUCED OR TRANSFERRED TO OTHER DOCUMENTS OR DISCLOSED TO OTHERS OR USED FOR ANY PURPOSE OTHER THAN THAT WHICH IT WAS OBTAINED WITHOUT THE EXPRESSED WRITTEN CONSENT OF SAMTEC, INC.

DO NOT SCALE DRAWING

SHEET SCALE: 1:0.4

520 PARK EAST BLVD, NEW ALBANY, IN 47150
PHONE: 812-944-6733 FAX: 812-948-5047
e-Mail: info@SAMTEC.com code: 55322

DESCRIPTION:
.635mm DOUBLE ROW TERMINAL STRIP

DWG. NO.
QMS-XXX-XX.XX-XX-D-X-XXX

BY: E.L.S. 6/09/2003 SHEET 6 OF 6

F:\DWG\MISC\MKTG\QMS-XXX-XX.XX-XX-D-X-XXX-MKT.SLDDRW

Downloaded from Elcodis.com electronic components distributor