2010/01/12 08:15:04 CAROL.TRIBBLE

DRAWING FOR REFERENCE:This is subject to change without notice

APPLICABLE STANDARD				
RATING	OPERATING TEMPERATURE RANGE	-35°C TO 85°C(NOTES 1)	STORAGE TEMPERATURE RANGE	-10°C TO 60°C
	VOLTAGE	30V AC	APPLICABLE CONNECTOR	BM10*(0.8)-34DP-0.4V(**)
	CURRENT	0.3A		

SPECIFICATIONS

ITEM	TEST METHOD	REQUIREMENTS	QT	AT
CONSTRUCTION				
GENERAL EXAMINATION	CONFIRMED VISUALLY AND BY MEASURING INSTRUMENT.	ACCORDING TO DRAWING.	X	X
MARKING	CONFIRMED VISUALLY.		X	X
ELECTRIC CHARACTERISTICS				
CONTACT RESISTANCE	20mV AC OR LESS 1kHz,1m A .	100mΩ MAX.	X	—
INSULATION RESISTANCE	100V DC.	50MΩ MIN.	X	—
VOLTAGE PROOF	100V AC FOR 1 min.	NO FLASHOVER OR BREAKDOWN.	X	—
MECHANICAL CHARACTERISTICS				
INSERTION AND WITHDRAWAL FORCES	MEASURED BY APPLICABLE CONNECTOR.	①INSERTION FORCE :36.6 (N)MAX ②WITHDRAWAL FORCE :6.9 (N)MIN	X	—
MECHANICAL OPERATION	10TIMES INSERTIONS AND WITHDRAWALS.	①CONTACT RESISTANCE: 100mΩ MAX. ②NO DAMAGE, CRACK OR LOOSENESS OF PARTS.	X	—
VIBRATION	FREQUENCY 10 TO 55 TO 10 Hz,APPROX 5min, SINGLE AMPLITUDE 0.75 mm,10CYCLES, FOR 3 DIRECTIONS.	①NO ELECTRICAL DISCONTINUITY OF 1 μs. ②NO DAMAGE, CRACK OR LOOSENESS OF PARTS.	X	—
SHOCK	490 m/s^2 DURATION OF PULSE 11 ms AT 3 TIMES FOR 3 DIRECTIONS.	①NO ELECTRICAL DISCONTINUITY OF 1 μs. ②NO DAMAGE, CRACK OR LOOSENESS OF PARTS.	X	—
ENVIRONMENTAL CHARACTERISTICS				
RAPID CHANGE OF TEMPERATURE	TEMPERATURE -55 → 85 °C TIME 30 → 30 min UNDER 5 CYCLES. (RELOCATION TIME TO CHAMBER: WITHIN 2 ~3 MIN)	①CONTACT RESISTANCE: 100mΩ MAX. ②INSULATION RESISTANCE: 50MΩ MIN. ③NO DAMAGE, CRACK OR LOOSENESS OF PARTS.	X	—
DAMP HEAT (STEADY STATE)	EXPOSED AT 40 ± 2 °C, 90 TO 95 %, 96 h.	①CONTACT RESISTANCE: 100mΩ MAX. ②INSULATION RESISTANCE: 25MΩ MIN. ③NO DAMAGE, CRACK OR LOOSENESS OF PARTS.	X	—
SULPHUR DIIOXIDE	EXPOSED IN 25 PPM FOR 96h,25℃,75%. (REFER TO JIS C 60068)	①CONTACT RESISTANCE: 100mΩ MAX. ②NO DAMAGE, CRACK OR LOOSENESS OF PARTS.	X	—

	COUNT	DESCRIPTION OF REVISIONS	DESIGNED	CHECKED	DATE
0					

REMARKS
NOTE1: INCLUDE THE TEMPERATURE RISING BY CURRENT

Unless otherwise specified, refer to JIS C 5402 and IEC 60512

APPROVED	KH. IKEDA	09.09.03
CHECKED	TS.MIYAZAKI	09.09.03
DESIGNED	SH.HOSODA	09.09.02
DRAWN	SH.HOSODA	09.05.09

Note QT:Qualification Test AT:Assurance Test X:Applicable Test

DRAWING NO. ELC4-318885-75

HRS	SPECIFICATION SHEET	PART NO.	BM10NB(0.8)-34DS-0.4V(75)	
	HIROSE ELECTRIC CO., LTD.	CODE NO.	CL684-6108-2-75	0 1/1

FORM HD0011-2-1

Downloaded from Elcodis.com electronic components distributor

DRAWING FOR REFERENCE: This is subject to change without notice
2010/01/12 08:15:05 CAROL TRIBBLE

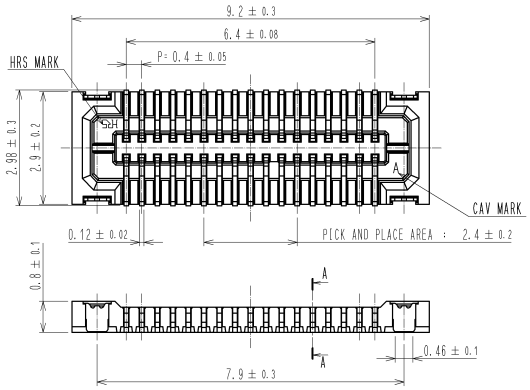

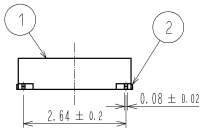

RECOMMENDED PATTERN

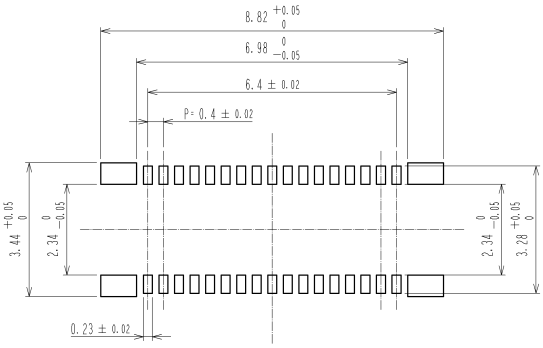

RECOMMENDED SOLDER PASTE : THICKNESS 120μm

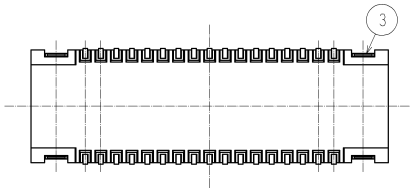

A-A

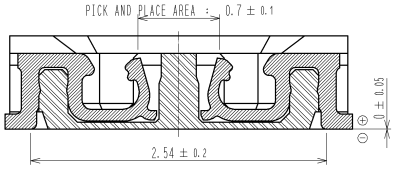

ENGAGEMENT FIGURE

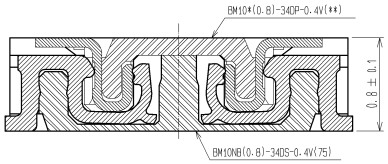

NOTE 1. ALL LEADS CO-PLANARITY SHALL BE 0.1 MAX.
2. PER REEL : 8000 CONNECTORS.
3. AT THE BEGINNING OF THE REEL, 100 mm AT MIN SHALL BE EMPTY POCKETS.
AT THE END OF THE REEL, 160 mm AT MIN SHALL BE EMPTY.
4 CONTACT PLATING SPECIFICATIONS.
CONTACT AREA : GOLD 0.1μm MIN.
SMT LEAD : GOLD 0.05μm MIN.
UNDERPLATING : NICKEL 1μm MIN.
(SURFACE : SEALING)
5 METAL HOLD DOWN PLATING SPECIFICATIONS.
MOUNTING AREA: GOLD 0.05μm MIN.
UNDERPLATING : NICKEL 1μm MIN.
6. PEEL FORCE OF COVER TAPE REFERS TO JIS C 0806.

NO.	MATERIAL	FINISH . REMARKS	NO.	MATERIAL	FINISH . REMARKS
3	PHOSPHOR BRONZE	5	6	PS	PLASTIC REEL(BLACK)
2	PHOSPHOR BRONZE	4	5	POLYESTER	CLEAR(COVER TAPE)
1	LCP	UL94V-0. BLACK	4	PS	CLEAR(EMBOSSED CARRIER TAPE)

UNITS mm	SCALE FREE	COUNT	DESCRIPTION OF REVISIONS	DESIGNED	CHECKED	DATE

HRS HIROSE ELECTRIC CO., LTD.

APPROVED	KH. IKEDA	09.09.03	DRAWING NO.	EDC3-318885-75
CHECED	TS. MIYAZAKI	09.09.03	PART NO.	BM10NB(0.8)-34DS-0.4V(75)
DESIGNED	SH. HOSODA	09.08.31	CODE NO.	CL684-6108-2-75
DRAWN	SH. HOSODA	09.05.09		1/2

FORM HC0011-5-7

Downloaded from Elcodis.com electronic components distributor

DRAWING FOR REFERENCE:This is subject to change without notice
2010/01/12 08:15:06 CAROL TRIBBLE

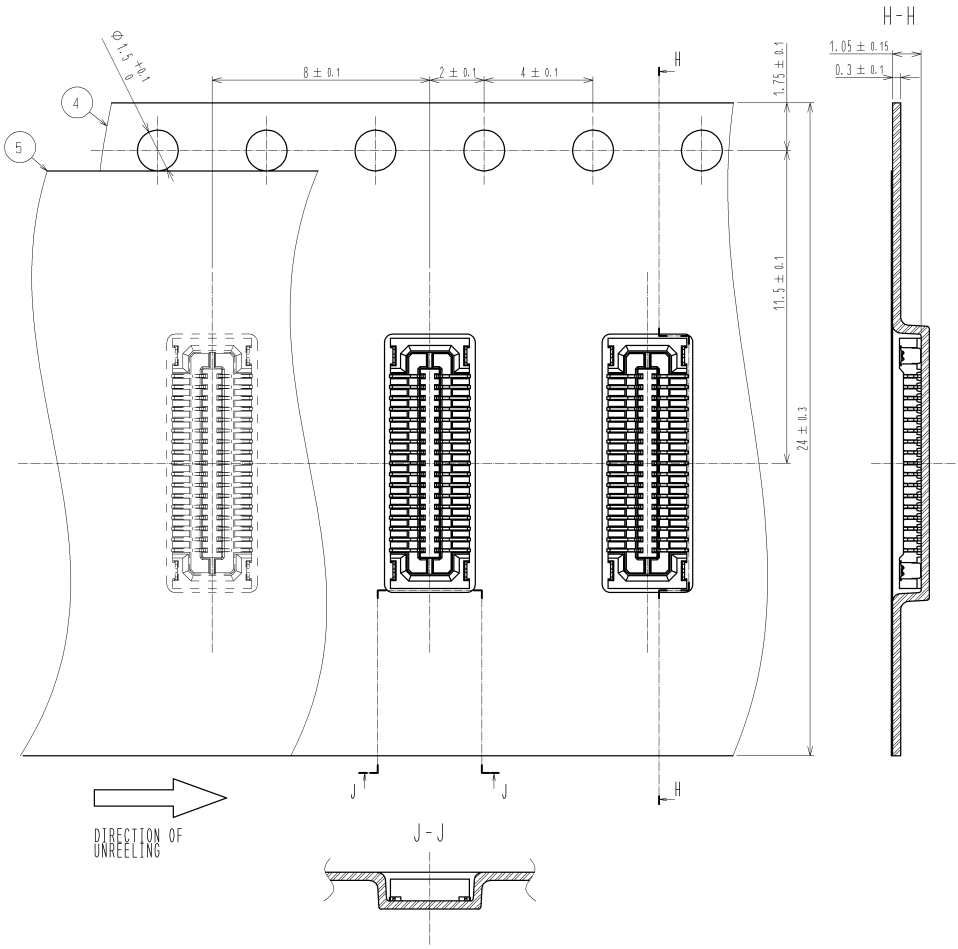

STYLE AND DIMENSION OF REEL (FREE SIZE)

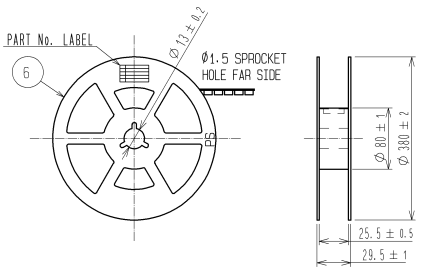

DETEIL OF PART No. LABEL

SUPPLIER
QUANTITY
PART NO.
CODE NO.
DATE OF MANUFACTURED

生産月日	年　月　日
図番	CL684-6108-2-75
品名	BM10NB(0.8)-34DS-0.4V(75)
納入数量	8000個
納入者	ヒロセ電機（株）

HRS	DRAWING NO. EDC3-318885-75
	PART NO. BM10NB(0.8)-34DS-0.4V(75)
	CODE NO. CL684-6108-2-75 △ 2/2

FORM HC0011-5-8

Downloaded from Elcodis.com electronic components distributor