THIS DRAWING IS UNPUBLISHED. RELEASED FOR PUBLICATION -.-.-
© COPYRIGHT - - BY TYCO ELECTRONICS CORPORATION. ALL RIGHTS RESERVED.

UOC	DIST
AD	47

REVISIONS

P	LTR	DESCRIPTION	DATE	DRN	APVD
	B	REVISED PER ECO-08-009495	25JUN08	DH	DD

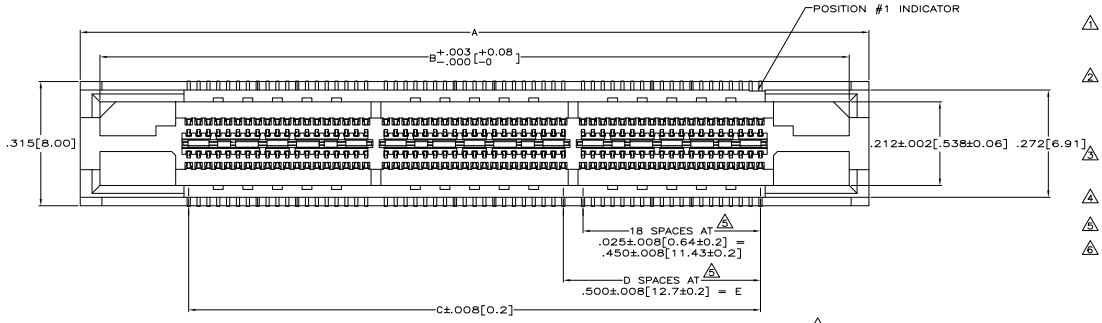

1. HOUSING: LIQUID CRYSTAL POLYMER, COLOR BLACK. CONTACTS: HIGH RELIABILITY COPPER ALLOY. GROUND BUSSES: PHOSPHOR BRONZE ALLOY, UNS C51100.
2. CONTACTS & GROUND BUSES: NICKEL UNDERPLATE ALL OVER, MATING SURFACE PLATED TO MEET LEVEL 2 PERFORMANCE REQUIREMENTS OF TE PRODUCT SPECIFICATION 108-1422, SOLDER TAILS PLATED MATTE TIN.
3. DATE CODE MARKED IN AREA INDICATED ON SIDE OPPOSITE POSITION #1.
4. ONE GROUND BUS WITH 5 TAILS PER EACH MODULE.
5. TOLERANCE NON-ACCUMULATIVE.
6. OBSOLETE

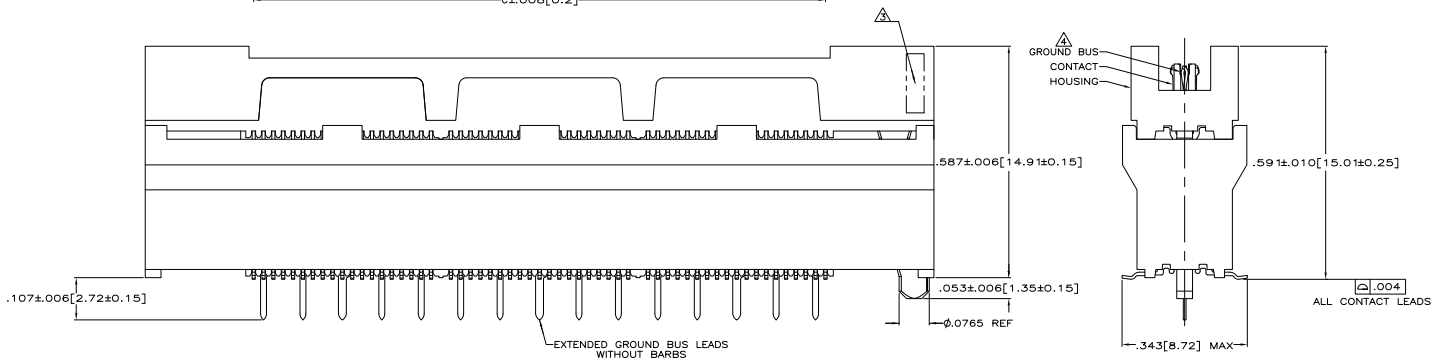

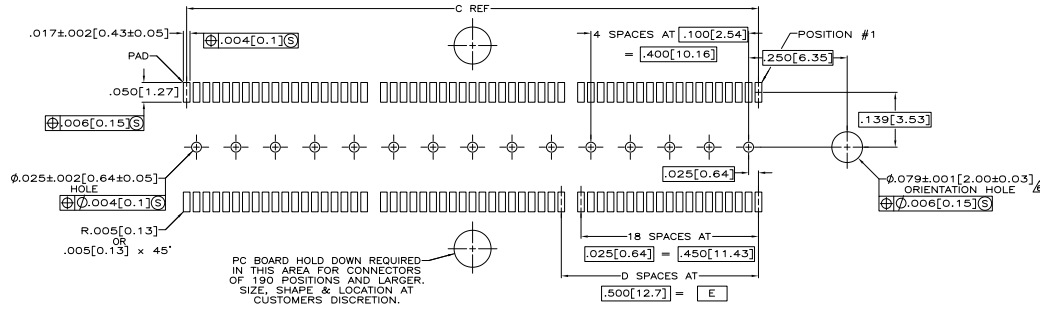

RECOMMENDED PC BOARD LAYOUT
(VIEWED FROM CONNECTOR SIDE)

E	D	C	B	A	NO OF POS	PART NUMBER
3.000[76.2]	6	3.450[87.63]	3.900[99.06]	4.000[101.6]	266	5767095-7
2.500[63.5]	5	2.950[74.93]	3.400[86.36]	3.500[88.9]	228	5767095-6
2.000[50.8]	4	2.450[62.23]	2.900[73.66]	3.000[76.2]	190	5767095-5
1.500[38.1]	3	1.950[49.53]	2.400[60.96]	2.500[63.5]	152	5767095-4
1.000[25.4]	2	1.450[36.83]	1.900[48.26]	2.000[50.8]	114	5767095-3
.500[12.7]	1	.950[24.13]	1.400[35.56]	1.500[38.1]	76	5767095-2
.000[0]	0	.450[11.43]	.900[22.86]	1.000[25.4]	38	5767095-1

THIS DRAWING IS A CONTROLLED DOCUMENT.

DIMENSIONS: INCHES

TOLERANCE UNLESS OTHERWISE SPECIFIED: 0 PLC ± - ; 1 PLC ± - ; 2 PLC ± - ; 3 PLC ± .005[0.13] ; 4 PLC ± - ; ANGLES ± -

MATERIAL 1 ; FINISH 2

DRN G. ATTADIA 28 OCT 04
CHK D. DIXON 28 OCT 04
APVD D. DIXON 28 OCT 04

PRODUCT SPEC 108-1422
APPLICATION SPEC 114-11004
WEIGHT -
CUSTOMER DRAWING

Tyco Electronics Corporation
Harrisburg, Pa 17105-3608

NAME RECEPTACLE ASSEMBLY, .355[9.02] VERTICAL, .025[0.64] CENTER LINE, MICTOR

SIZE A1 CAGE CODE 00779 DRAWING NO C-5767095 RESTRICTED TO -

SCALE 8:1 SHEET 1 OF 1 REV B

AMP 4805 REV 31MM2000

Downloaded from Elcodis.com electronic components distributor