THIS DRAWING IS UNPUBLISHED. RELEASED FOR PUBLICATION .1997.
© COPYRIGHT 1997 BY AMP INCORPORATED. ALL RIGHTS RESERVED.

LOC	DIST
DY	-

REVISIONS

P	LTR	DESCRIPTION	DATE	DWN	APVD
	A1	REVISED PER ECO-10-000445	11JAN10	KK	AEG

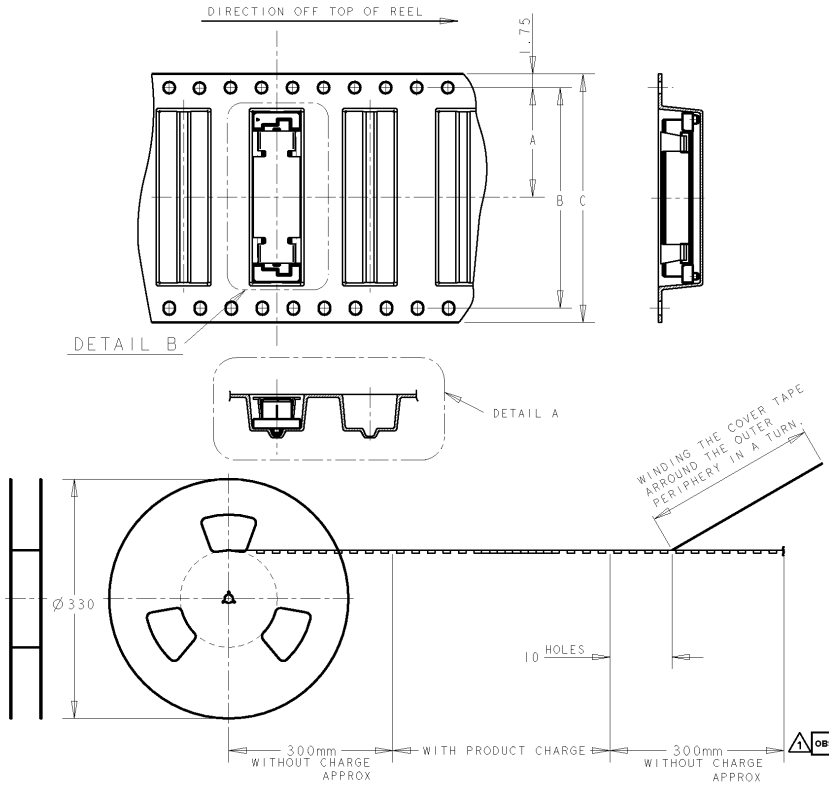

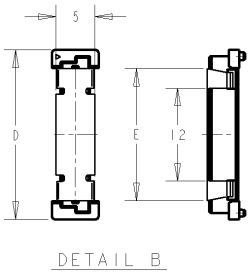

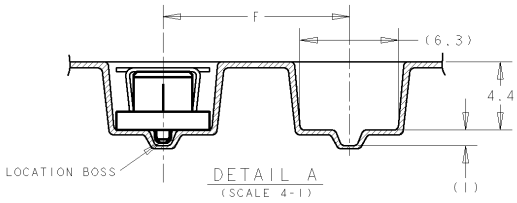

TOOLING STATUS	QTY	E	E	D	C	B	A	POS	CONN P/N	PART NO.
AVAILABLE				85.8				200	1- -0	1- -0
				77.8	104	100.4	50.2	180	-9	-9
				69.8				160	-8	-8
				61.8	88	84.4	42.2	140	-6	-6
				53.8				120	-5	-5
	700	16		45.8	72	68.4	34.2	100	-4	-4
				37.8	56	52.4	26.2	80	-3	-3
				29.8	44	40.4	20.2	60	-2	-2
	1000	12	17	21.8	32	28.4	14.2	40	6123000-1	5353999-1

1 OBSOLETE PARTS: OBSOLETE CIS STREAMLINING PER D.RENAUD/D.SINISI

THIS DRAWING IS A CONTROLLED DOCUMENT FOR AMP INCORPORATED. IT IS SUBJECT TO CHANGE AND THE CONTROLLING ENGINEERING ORGANIZATION SHOULD BE CONTACTED FOR THE LATEST REVISION.

DIMENSIONS: mm

TOLERANCES UNLESS OTHERWISE SPECIFIED:
0 PLC: ±-
1 PLC: ±0.2
2 PLC: ±0.25
3 PLC: ±3
4 PLC: ±-
ANGLES: ±3°

MATERIAL

FINISH

DWN FLORENCE TAN 16SEP04
CHK ERIC TNG
APVD SF LEONG
PRODUCT SPEC 108-5390
APPLICATION SPEC
WEIGHT

tyco Electronics — Tyco Electronics (Singapore) Pte. Ltd.

NAME EMBOSS ASSY FOR FH 0.8BTB CONNECTOR REC 5H 0.5 BOSS LENGTH (0.76µm GOLD)

SIZE A3 | CAGE CODE 00779 | DRAWING NO C- 5353999

CUSTOMER DRAWING | SCALE 2-1 | SHEET 1 OF 1 | REV A1

AMP1470-19 REV 10/93 This is a TRANSLATED file from Computervision, Inc., Medusa Revision 12.2.5T

Downloaded from Elcodis.com electronic components distributor