| 版数 REV. | 年月日 DATE | DCN NO. | 変更内容 DESCRIPTION | 製図 DR. | 担当 CHK. | 査閲 APPD. | 承認 APPD. |
|---|---|---|---|---|---|---|---|
| | | | | | | | |
| | | | | | | | |
| | | | | | | | |

図面番号(DRAWING NO.) SJ100394

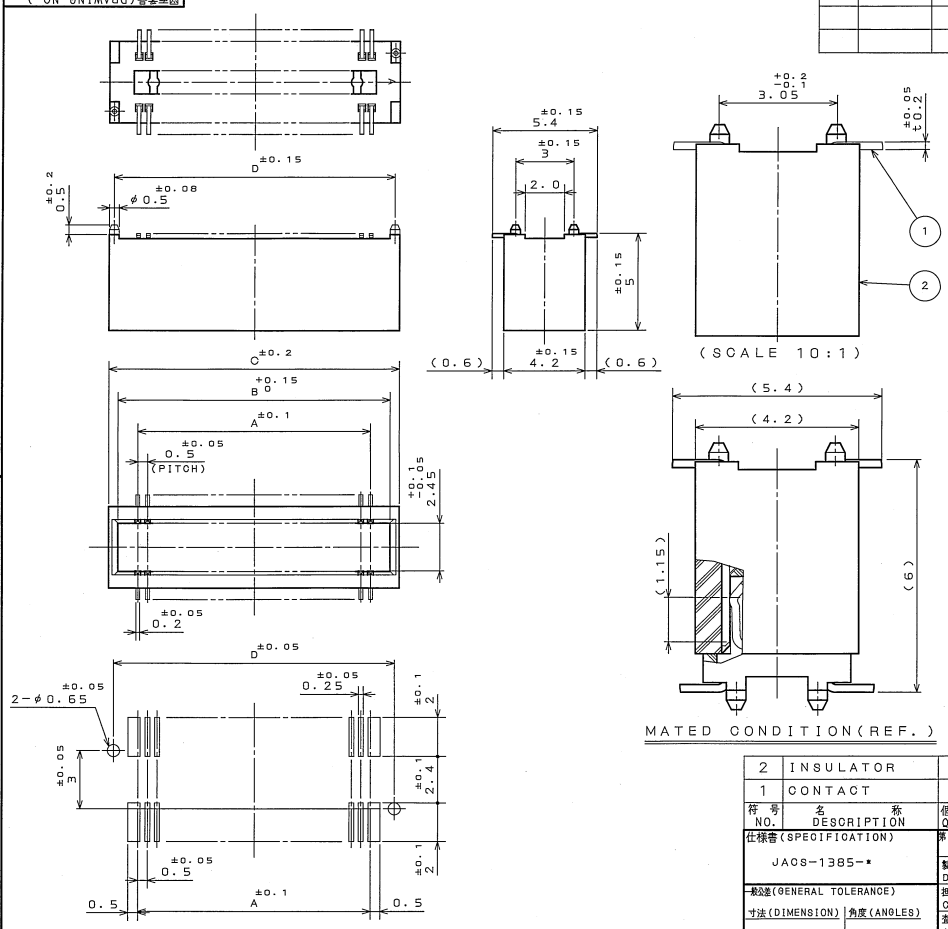


APPLICABLE P.C.B. DIMENSION(REF.)
(CONNECTOR MOUNTING SIDE)

MATED CONDITION(REF.)

TABLE 1

| No. OF CONTACTS(N) | A | B | C | D |
|---|---|---|---|---|
| 30 | 7.0 | 9.0 | 10.0 | 9.5 |
| 40 | 9.5 | 11.5 | 12.5 | 12.0 |
| 50 | 12.0 | 14.0 | 15.0 | 14.5 |
| 60 | 14.5 | 16.5 | 17.5 | 17.0 |
| 80 | 19.5 | 21.5 | 22.5 | 22.0 |
| 100 | 24.5 | 26.5 | 27.5 | 27.0 |
| 120 | 29.5 | 31.5 | 32.5 | 32.0 |
| 130 | 32.0 | 34.0 | 35.0 | 34.5 |

TABLE 2

| FINISH | CONTACT AREA | TERMINAL AREA |
|---|---|---|
| N 1 | GOLD(0.1μm MIN) OVER NICKEL | GOLD FLASH OVER NICKEL |

NOTE 1. COPLANARITY IS AS PER APPLICABLE SPECIFICATION.

注1. 端子の振れ規定は適用仕様書による。

| 符号 NO. | 名称 DESCRIPTION | 個数 QTY. | 材料 MATERIAL | 仕上 FINISH | 備考 REMARKS |
|---|---|---|---|---|---|
| 2 | INSULATOR | 1 | GLASS FILLED PPS | | COLOR:BLACK |
| 1 | CONTACT | N | PHOSPHOR BRONZE | TABLE 2 | |

仕様書(SPECIFICATION): JACS-1385-*

一般公差(GENERAL TOLERANCE)

| 寸法(DIMENSION) | 角度(ANGLES) |
|---|---|
| . ±0.8 | X° ± |
| .X ±0.4 | X°X'± |
| .XX ±0.1 | |
| .XXX± | |

第1版(ORIGINAL DATE): 4.Dec.2003

製図 DR.: S.MIURA

担当 CHK.: T.SHIODA

査閲 APPD.: K. Kawase

承認 APPD.: S. Kashiwagi

尺度(SCALE): 5:1 シリーズ(SERIES): WR

名称(TITLE): WR-*PB-VF60-N1

重量(WEIGHT):

日本航空電子工業株式会社
JAPAN AVIATION ELECTRONICS INDUSTRY, LTD.

図面番号(DRAWING NO.): SJ100394

版数(REV.): 1

SIZE A3

JAE-CONNECTOR.COM
Reference Only

LEAD FREE この製品は鉛フリー品です

JAE CONNECTOR DIV. PROPRIETARY.
COPYRIGHT (C) 2003, JAPAN AVIATION ELECTRONICS INDUSTRY, LTD.

DOF-0-212E(03.08)

Downloaded from Elcodis.com electronic components distributor