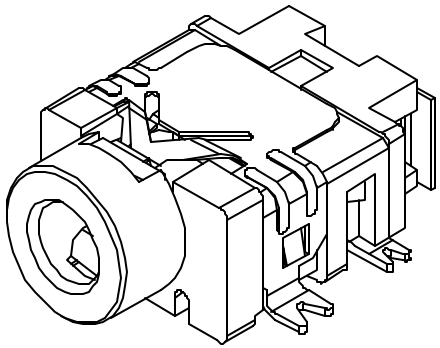

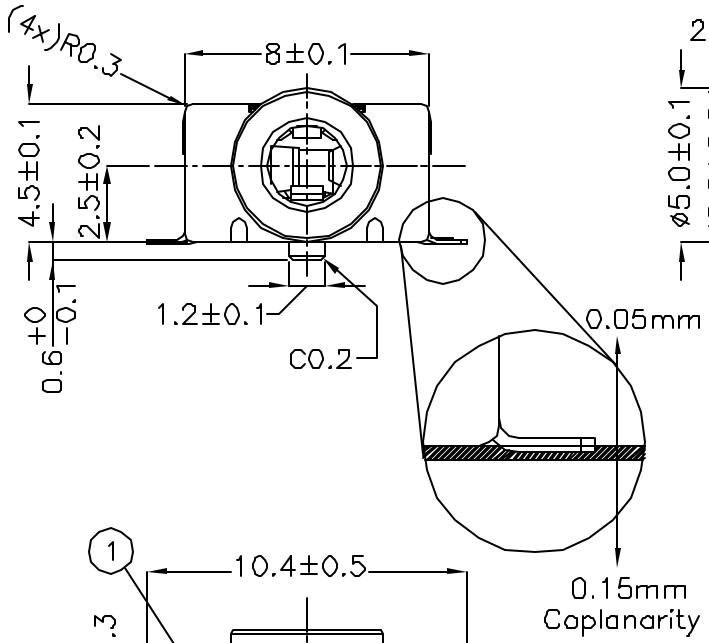

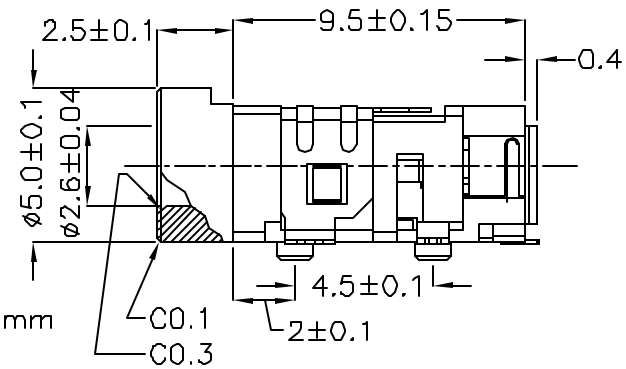

Schematic

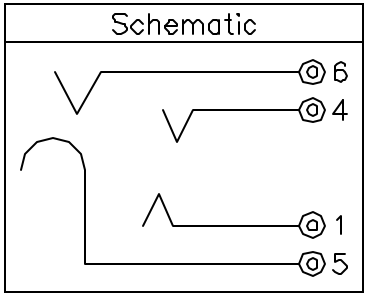

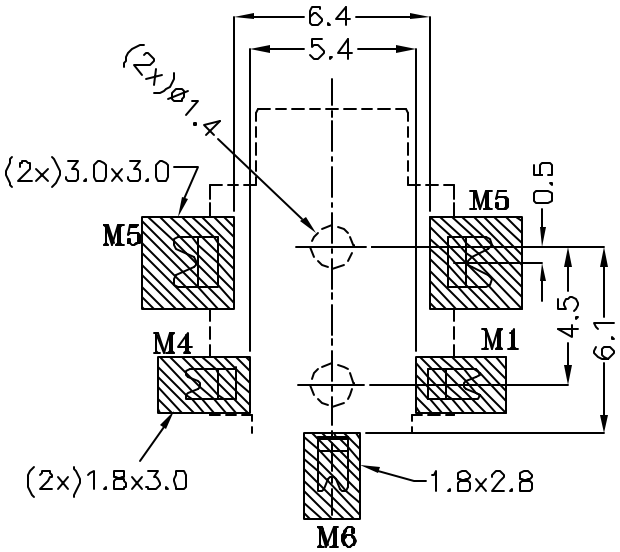

Solder Pad Layout
Top View

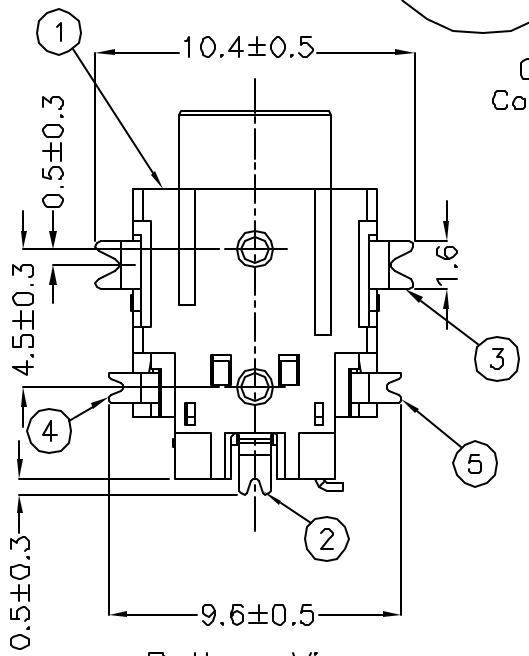

Bottom View

Itm	Name	Material	Finish	Qty	Note
5	Tip(M4)	Cu–Ti	Silver	1	25T
4	Ring(M1)	PBS(5210)	Silver	1	20T
3	Extra Ring(M5)	PBS(5210)	Silver	1	20T
2	Ground(M6)	PBS(5210)	Silver	1	20T
1	Housing(P1)	NY6T/NY9T		1	

Specifications
Rated Voltage: 16 VDC
Rated Current: 300MA
Contact Resistance: 100 mOHMS or less under all conditions including after life testing.
Insulation Resistance: 100 M OHMS or greater at 500 VDC.
Dielectric Withstand Voltage: 500V AC RMS for 1 minute
Life: 5,000 cycles min.

CUI INC
9615 SW Allen, Suite 103
Beaverton, OR 97005
Phone: (503) 643-4899
800-275-4899
Fax: (503) 372-1266
Website: www.cui.com

TITLE: SMT Audio Jack w/4 Conductors 2.5mm

PART NO.	UNITS:
SJ-42534-SMT	Millimeters

DRAWN BY:	APPROVED BY:	SCALE:
Todd R. White		4x

PC FILE NAME: SJ-42534-SMT.dwg

COPYRIGHT 2000 BY CUI INC.

Downloaded from Elcodis.com electronic components distributor