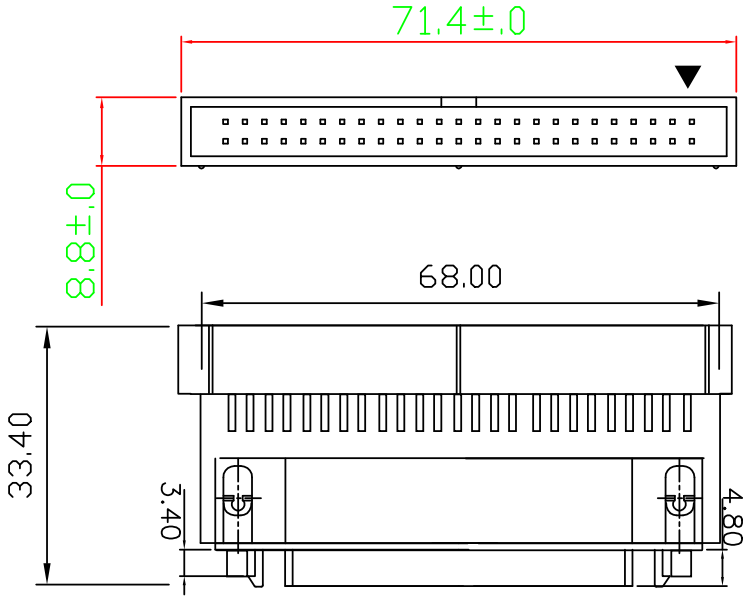

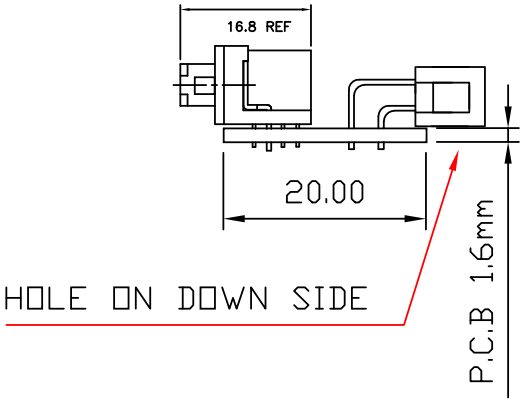

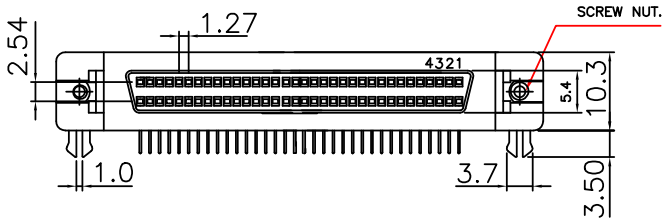

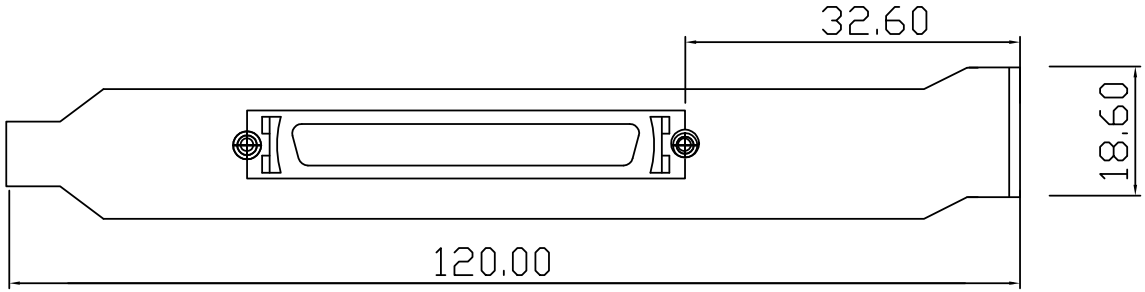

PIN ASSIGNMENT

A	B	A	B
1	X	35	X
2	X	36	X
3	X	37	X
4	X	38	X
5	X	39	X
6	1	40	2
7	3	41	4
8	5	42	6
9	7	43	8
10	9	44	10
11	11	45	12
12	13	46	14
13	15	47	16
14	17	48	18
15	19	49	20
16	21	50	22
17	X	51	X
18	X	52	26
19	27	53	28
20	29	54	30
21	31	55	32
22	33	56	34
23	35	57	36
24	37	58	38
25	39	59	40
26	41	60	42
27	43	61	44
28	45	62	46
29	47	63	48
30	49	64	50
31	X	65	X
32	X	66	X
33	X	67	X
34	X	68	X

UNLESS OTHERWISE SPECIFIED TOLERANCE
ANG. ±5°
0. ±0.5
.0 ±0.3
.00 ±0.2

Assmann Electronic GmbH

SCALE: 1:1	UNIT: mm		
DRAWN MICHAEL	02/16/00	DRAWN NAME:	150D11-BTL
CHECKED	/ /		
APPROVED	/ /	PRODUCT NO.	AB 840
SIZE A4	REV. A	FILE NAME:	150D11-BTL

REV.	DESCRIPTION	DATE
A 150D11-BTL SLOT CARD	CARD HPD68PIN FEMALE W/BRACKET TO BOX HEADER50 MALE	02/16/00

Downloaded from Elcodis.com electronic components distributor