MATERIAL NUMBER	# OF COLUMNS	DIM "A" MAX	DIM "B"
75710-***5	5	25.90	14.80
75710-***6	6	29.60	18.50
75710-***8	8	37.00	25.90
75710-***0	10	44.40	33.30

75710-****

MODULE TYPE -- TAIL PLATING TYPE
GUIDE RIGHT -- TIN/LEAD = 4
GUIDE RIGHT -- TIN ONLY = 5

POLARIZATION KEY ORIENTATION
0 = NO KEY
1 = A 5 = E
2 = B 6 = F
3 = C 7 = G
4 = D 8 = H

# OF COLUMNS
05 = 5 COL
06 = 6 COL
08 = 8 COL
10 = 10 COL
55 = 5 COL W/ESD
56 = 6 COL W/ESD
58 = 8 COL W/ESD
50 = 10 COL W/ESD

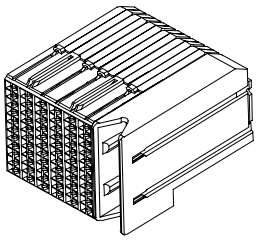

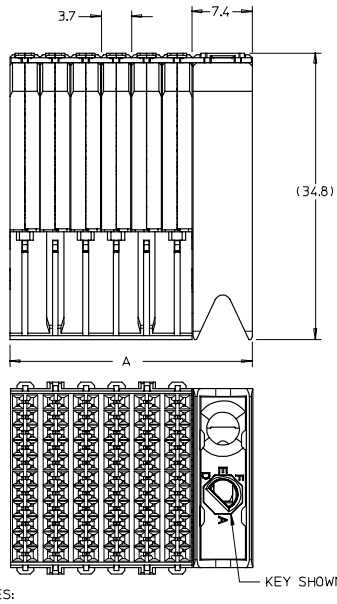

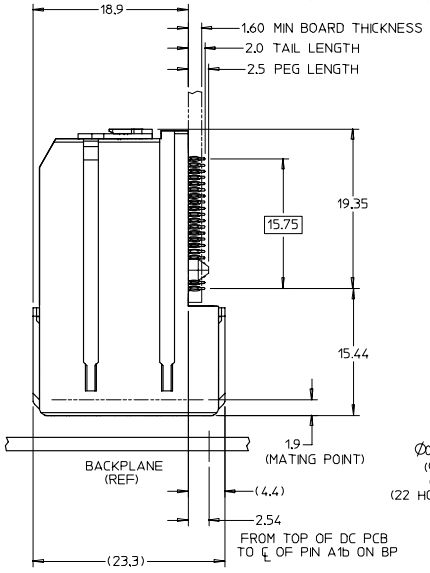

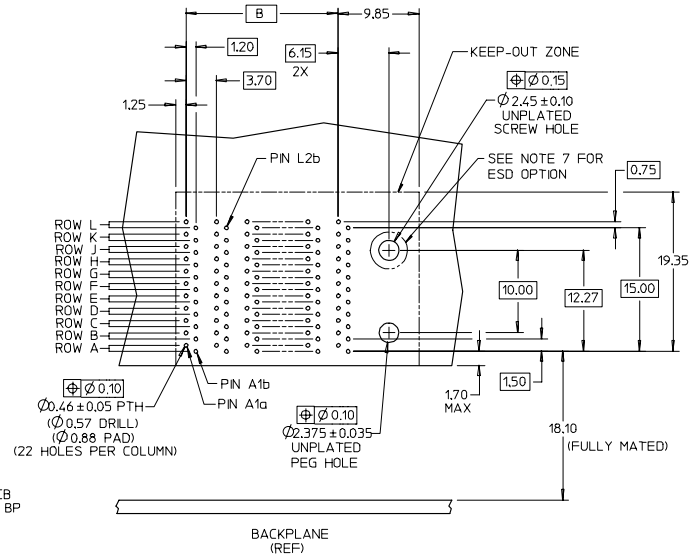

DAUGHTERCARD HOLE PATTERN
(CONNECTOR SIDE)

NOTES:
1. MATERIALS: HOUSING - LIQUID CRYSTAL POLYMER (LCP) GLASS-FILLED, UL94V-0
   TERMINALS - HIGH PERFORMANCE COPPER ALLOY
2. FINISH: 30uIN MIN GOLD IN CONTACT AREA, SELECTIVE TIN/LEAD (-4***)
   OR SELECTIVE TIN (-5***) ON PCB TAILS, NICKEL OVERALL.
3. REFER TO MOLEX PRODUCT SPECIFICATION PS-75710-999 FOR PERFORMANCE SPECS.
4. PRODUCT IS PACKAGED PER PK-70873-609.
5. THIS PART CONFORMS TO CLASS B REQUIREMENTS OF COSMETIC SPEC PS-45499-002.
6. GUIDED PARTS TO BE SHIPPED WITH 2-32 TYPE AB
   SELF-TAPPING SCREW P/N 73726-0000.
7. FOR GROUNDED GUIDE MODULES USE DIA 2.45+/-0.10 (PTH), DIA 2.58 (DRILL),
   AND DIA 4.50 (PAD).

REV	DESCRIPTION	
C	ADD ESD OPTION	
	EC NO: UCP2007-2348	
	DRWN:BPISZCZOR	2007/03/19
	CHKD:	2007/03/19
	APPR: JLAURX	2007/03/19

QUALITY SYMBOLS
▼=0
◁▽=0

GENERAL TOLERANCES (UNLESS SPECIFIED)

	mm	INCH
4 PLACES	± ---	± ---
3 PLACES	± ---	± ---
2 PLACES	± 0.13	± ---
1 PLACE	± 0.25	± ---

ANGULAR ±1/2°

DRAFT WHERE APPLICABLE MUST REMAIN WITHIN DIMENSIONS

DIMENSION STYLE: MM ONLY
SCALE: 3:1
DESIGN UNITS: METRIC
THIRD ANGLE PROJECTION

DRAWN BY	JLAURX	DATE 2/17/05
CHECKED BY	NMARTIN	DATE 2/17/05
APPROVED BY	CBIXLER	DATE 2/17/05

TITLE: I-TRAC DAUGHTERCARD
11 ROW SIGNAL MODULE
GUIDE RIGHT SALES DWG

molex MOLEX INCORPORATED

MATERIAL NO.: SEE CHART
DOCUMENT NO.: SD-75710-004
SHEET NO.: 1 OF 1
SIZE: C

THIS DRAWING CONTAINS INFORMATION THAT IS PROPRIETARY TO MOLEX INCORPORATED AND SHOULD NOT BE USED WITHOUT WRITTEN PERMISSION

tb_frame_C_P_AM_T
Rev. D 2004/06/28

Downloaded from Elcodis.com electronic components distributor