THIS DRAWING IS UNPUBLISHED. RELEASED FOR PUBLICATION -.-.-
© COPYRIGHT - BY TYCO ELECTRONICS CORPORATION. ALL RIGHTS RESERVED.

LOC	DIST
DF	AO

REVISIONS

P	LTR	DESCRIPTION	DATE	DRN	APVD
	C	REV PER ECO 06-10646	5-10-06	CT	KH

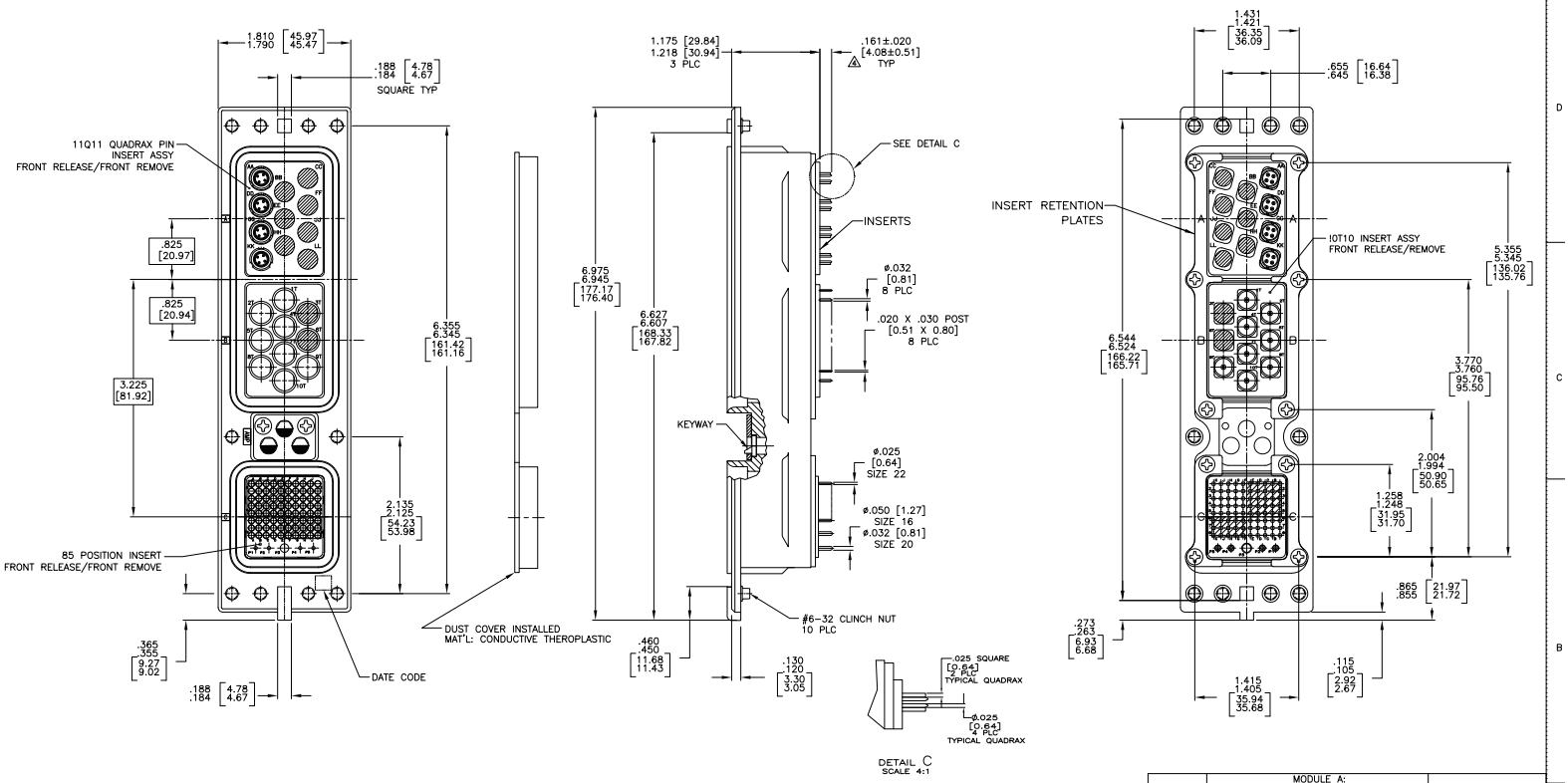

COMPONENT	MATERIAL	FINISH
SHELL	DIE CAST ALUMINUM PER ASTM-B-85	ELECTROLESS NICKEL PER MIL-C-26074, CLASS 3 OR 4, GRADE B
RETENTION PLATES	ALUMINUM ALLOY PER ASTM-B-209	ELECTROLESS NICKEL PER MIL-C-26074, CLASS 3 OR 4, GRADE B
SCREWS	STAINLESS STEEL	–
KEYWAY	ZINC ALLOY PER ASTM-B-86	–
85 POSN. INSERT	THERMOSET	–
KEYWAY RETAINING PLATE	ALUMINUM ALLOY PER ASTM-B-209	BLUE ANODIZED PER MIL-A-8625
11Q11 & 10T10 INSERT	ALUMINUM ALLOY PER ASTM-B-209	ELECTROLESS NICKEL PER MIL-C-26074, CLASS 3 OR 4, GRADE B
FILLER PLUGS	ALUMINUM ALLOY PER ASTM-B-211	ELECTROLESS NICKEL PER MIL-C-26074.

192	MODULE A: SIZE 8 QUADRAX: 1445626-3 (QTY=4) SIZE 8 FILLER PLUG: 1663983-1 (QTY=7) CONTACTS & PLUGS LOADED AS SHOWN MODULE B: SIZE 8 COAX: 448540-4 (QTY=8) SIZE 8 FILLER PLUG: 1663983-3 (QTY=2) CONTACTS & PLUGS LOADED AS SHOWN MODULE C: SIZE 22: 211431-2 (QTY=80) SIZE 16: 2-448139-1 (QTY=1) SIZE 20: 1-448138-5 (QTY=4)	1883407-1
KEYING POSITION	CONTACTS & FILLER PLUGS INCLUDED AND INSTALLED	PART NUMBER

1. CONNECTOR DIMENSIONS ARE PER ARINC 600 SPECIFICATION UNLESS OTHERWISE SPECIFIED.
2. CONNECTOR IS SUPPLIED WITH CONTACTS (PER TABLE) ASSEMBLED AS SHOWN.
3. KEYING SHOWN IN POSITION "01" FOR ILLUSTRATION ONLY. CONNECTORS SHIPPED WITH KEYING INSTALLED IN POSITION PER TABLE.
4. WITH CONTACT FULLY SEATED TO REAR OF CAVITY.
5. FILLER PLUGS ARE SHOWN AS CROSSHATCHED AREAS IN CAVITIES.

THIS DRAWING IS A CONTROLLED DOCUMENT.

DRN	C.C.THOMAS	4-23-06
CHK	K.HOGAN	4-23-06
APV	K.HOGAN	4-23-06
PRODUCT SPEC	–	
APPLICATION SPEC	–	
WEIGHT	–	

DIMENSIONS: INCHES [mm]
TOLERANCE UNLESS OTHERWISE SPECIFIED: 0 PLC ± –; 1 PLC ± –; 2 PLC ± –; 3 PLC ± .001 [0.03]; 4 PLC ± –; ANGLES ± –
MATERIAL: SEE TABLE
FINISH: SEE TABLE

AMP Tyco Electronics Corporation Harrisburg, PA 17105-3608

NAME: RCPT ASSY,SIZE 2,ARINC 600 (11Q11/10T10/85 FR)

SIZE: A1 | CAGE CODE: 00779 | DRAWING NO: C-1883407 | RESTRICTED TO: –

CUSTOMER DRAWING | SCALE 1.5:1 | SHEET 1 OF 2 | REV C

AMP 4805 REV 31MR2000

09MAY2006 1:47pm usg16412 H:\deemed\1883407_1_c.dwg

Downloaded from Elcodis.com electronic components distributor

THIS DRAWING IS UNPUBLISHED: RELEASED FOR PUBLICATION -.-.-
© COPYRIGHT - BY TYCO ELECTRONICS CORPORATION. ALL RIGHTS RESERVED.

LOC	DIST
DF	AO

REVISIONS

P	LTR	DESCRIPTION	DATE	DWN	APVD
-	-	SEE SHEET #1	-	-	-

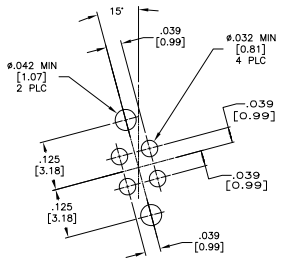

DETAIL T
SCALE NTS
4 PLC

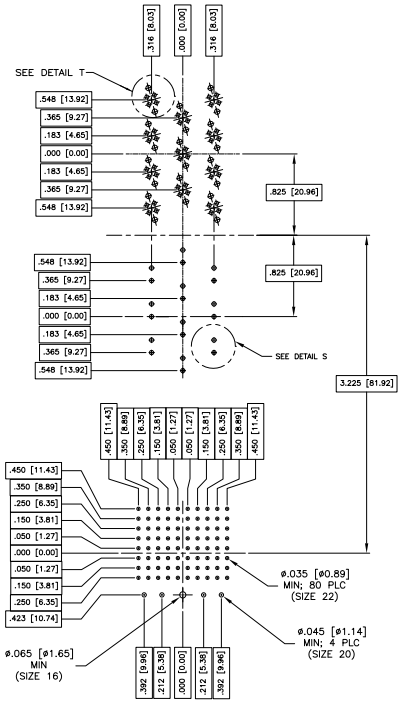

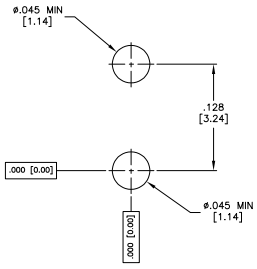

DETAIL S
SCALE NTS
10 PLC

THIS DRAWING IS A CONTROLLED DOCUMENT.

DIMENSIONS: INCHES [mm]

TOLERANCE UNLESS OTHERWISE SPECIFIED:
0 PLC ± -
1 PLC ± -
2 PLC ± -
3 PLC ± -
4 PLC ± -
ANGLES ± -

MATERIAL: SEE TABLE
FINISH: SEE TABLE

TITLE	C.C.THOMAS	4-23-08
DR	K.HOGAN	4-23-08
APVD	K.HOGAN	4-23-08
PRODUCT SPEC	—	
APPLICATION SPEC	—	
WEIGHT	—	

CUSTOMER DRAWING

Tyco Electronics Corporation
Harrisburg, Pa 17105-3608

NAME: RCPT ASSY,SIZE 2,ARINC 600 (11Q11/10T10/85 FR)

SIZE	CAGE CODE	DRAWING NO	RESTRICTED TO
A1	00779	C-1883407	—

SCALE 1.5:1 SHEET 2 OF 2 REV C

AMP 4805 REV 31MM2000

09MAY2006 1:45pm usd16412 H:\dcmed\1883407_2_c.dwg

Downloaded from Elcodis.com electronic components distributor