THIS DRAWING IS UNPUBLISHED. RELEASED FOR PUBLICATION - N/A -
© COPYRIGHT N/A BY TYCO ELECTRONICS CORPORATION. ALL RIGHTS RESERVED.

LOC	DIST
R	39

REVISIONS

P	LTR	DESCRIPTION	DATE	DRN	APVD
	N	REV PER ECO-11-000793	17FEB11	PY	DE

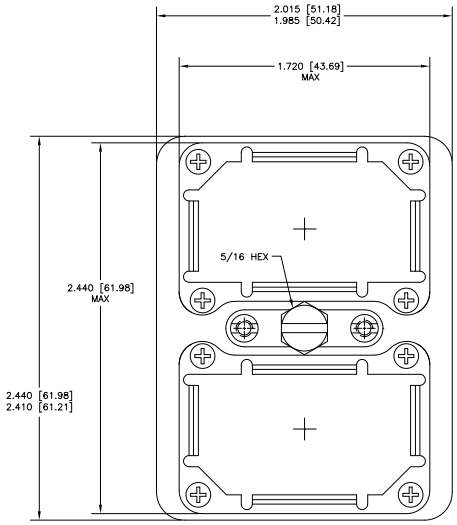

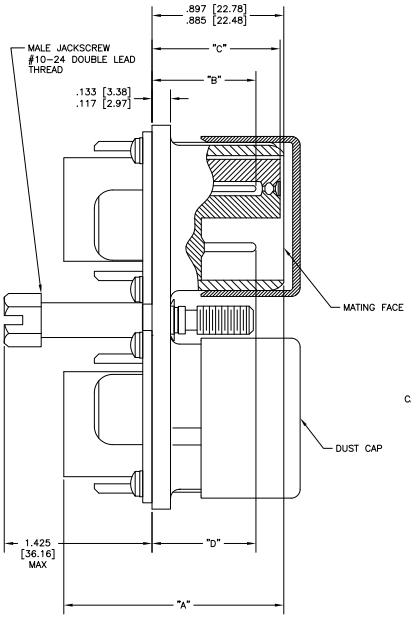

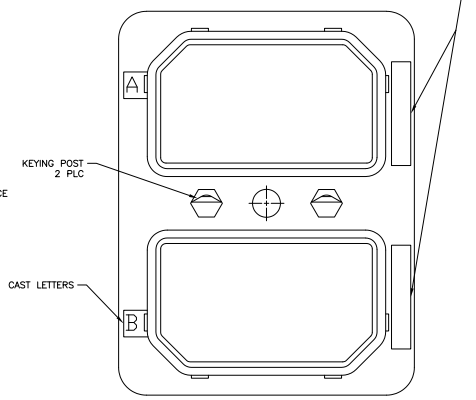

1. MATERIAL & FINISH
   SHELL: DIE CAST ALUM. ALLOY PER FED SPEC QQ-A-591
   FINISH: CAD. PLATED PER QQ-P-416, TYPE I, CLASS 2
   YELLOW CHROMATE CONVERSION.
   INSULATOR, HARD: EPOXY PER MIL-M-24325.
   INSULATOR, SOFT: FLUOROSILICONE RUBBER, COLOR: BLUE.
   GROMMET PROTECTOR: ALUM. ALLOY, FINISH: BLUE EPOXY.
   POLARIZING POST & NUTS: STAINLESS STEEL.
   MALE JACKSCREW: STAINLESS STEEL.
   SCREWS & WASHERS: STEEL, CAD. PLATED PER QQ-P-416.
   DUST CAP: CLEAR VINYL.

2. CONTACTS SHOWN IN POSITION FOR ILLUSTRATION ONLY, ARE INCLUDED IN A CONTAINER WITHIN CONNECTOR PACKAGE FOR SHIPMENT, EXCEPT P/N'S 1-207596-1 THRU 2-207596-0.

4. COAX CONTACTS & SEALING BOOTS MUST BE ORDERED SEPARATELY.

5. FOR CONTACT SIZE 22 DIMENSION "B" REPRESENTS PIN CONTACTS & DIMENSION "D" REPRESENTS SOCKET CONTACTS.

6. ALL METRIC DIMENSIONS ARE SHOWN IN PARENTHESIS.

7. FOR MATING CONNECTOR SEE 207595.

8. CONNECTORS ORDERED LESS CONTACTS WILL BE MARKED WITH SAME P/N AS CONNECTORS ORDERED WITH CONTACTS.

"B"				"C"				"D"			
22	20	16	12	22	20	16	12	22	20	16	12
.736 [18.69]	.827 [21.00]	.782 [19.86]	.793 [20.14]	.797 [20.24]	.893 [22.68]	.893 [22.68]	.893 [22.68]	.737 [18.72]	.700 [17.78]	.824 [20.93]	.824 [20.93]
.688 [17.48]	.769 [19.53]	.735 [18.67]	.746 [18.95]	.769 [19.53]	.865 [21.97]	.865 [21.97]	.865 [21.97]	.688 [17.48]	.585 [14.86]	.746 [18.95]	.746 [18.95]

	INSERT ARRANGEMENT													
	C2	C3	8	C8	D8	26	32C2	33C4	40	40CI	45	57	67	106
"A" MAX	1.201 [30.51]	1.201 [30.51]	1.425 [36.20]	1.201 [30.51]	1.541 [39.14]	1.541 [39.14]	1.595 [40.51]	1.616 [41.05]	1.425 [36.20]	1.595 [40.51]	1.541 [39.14]	1.541 [39.14]	1.425 [36.20]	1.541 [39.14]

	PART NO.	ARRANGEMENT IN MODULE "A"	ARRANGEMENT IN MODULE "B"	PART NO. (LESS CONTACTS) 8	
	207596-1	(106S)	(67P)	1-207596-1	
	207596-2	(106S)	(26P)	1-207596-2	
	207596-3	(106S)	(106S)	1-207596-3	
OBSOLETE	207596-4	(106S)	(106P)	1-207596-4	OBSOLETE
	207596-5	(106P)	(106P)	1-207596-5	
	207596-6	(106P)	(26S)	1-207596-6	
	207596-7	(106P)	(67S)	1-207596-7	
OBSOLETE	207596-8	(106P)	(67P)	1-207596-8	OBSOLETE
	207596-9	(106P)	(32C2S)	1-207596-9	
	1-207596-0	(106S)	(32C2P)	2-207596-0	OBSOLETE

THIS DRAWING IS A CONTROLLED DOCUMENT.

DIMENSIONS: INCHES

MATERIAL -

TOLERANCE UNLESS OTHERWISE SPECIFIED
6 PLC ± -
3 PLC ± -
2 PLC ± -
1 PLC ± .005[0.13]
4 PLC ± -
ANGLES ± -
FINISH -

DR	J KAISER	23-SEP-03
CH	J MARKEY	23-SEP-03
APV	J MARKEY	23-SEP-03
PRODUCT SPEC	-	
APPLICATION SPEC	-	
WEIGHT	-	

Tyco Electronics Corporation
Harrisburg, Pa 17105-3608

NAME: PLUG CONNECTOR INSTALLATION (WITH CENTER MALE JACKSCREW)

SIZE	CAGE CODE	DRAWING NO	RESTRICTED TO
A1	00779	C-207596	-

CUSTOMER DRAWING SCALE 3:1 SHEET 1 OF 1 REV N

AMP 4805 REV 31MM2000

Downloaded from Elcodis.com electronic components distributor