THIS DRAWING IS UNPUBLISHED. RELEASED FOR PUBLICATION 20
© COPYRIGHT 20 BY TYCO ELECTRONICS CORPORATION. ALL RIGHTS RESERVED.

LOC AD DIST 00

REVISIONS				
P	LTR	DESCRIPTION	DATE	DRN	APVD
	A	EC 0512-0341-04	29JUL2004	DW	GG
	A1	REVISED PER ECO-09-025699	23NOV2009	KK	AEG

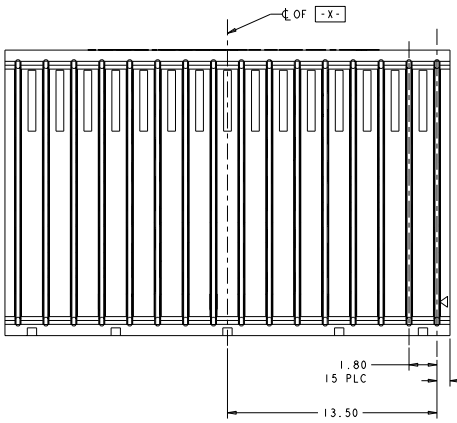

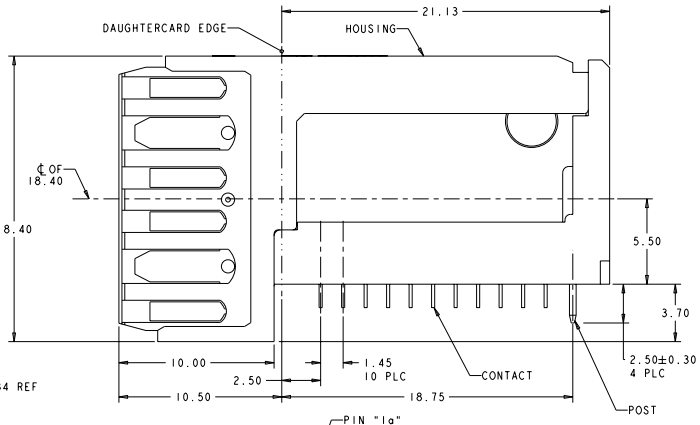

1. HOUSING: LCP, UL94V-O, BLACK.
   CONTACT: PHOSPHOR BRONZE.
   POST: BRASS WIRE.
2. CONTACT: 0.76 µm GOLD PER ASTM B 488 IN CONTACT AREA,
   1.27 µm MIN TIN-LEAD ON PCB TAIL,
   OVER 1.27µm MIN NICKEL PER SAE AMS-QQ-N-290 OVER ALL.
   POST: 1.27 µm MIN NICKEL.
3. MANUFACTURING TOLERANCE
   FOR A Ø0.56±0.05 FINISHED HOLE.
   DRILLED HOLE: Ø0.65±0.02
   COPPER PLATE: 0.050-0.025
   TIN/LEAD PLATE: 0.0124-0.0038
4. CONTACT: 0.76 µm GOLD PER ASTM B 488 IN CONTACT AREA,
   1.27 µm MIN MATTE TIN PER ASTM B 545 ON PCB TAIL,
   OVER 1.27 µm MIN NICKEL PER SAE AMS-QQ-N-290 OVER ALL.
   POST: 1.27 µm MIN NICKEL.
5. MANUFACTURING TOLERANCE FOR A Ø 0.575 ±0.045 FINISHED HOLE WITHOUT TIN LEAD PLATING:
   DRILLED HOLE: Ø0.65 ±0.02
   COPPER PLATING: 0.025 - 0.050
6. OBSOLETE PARTS: OBSOLETE CIS STREAMLINING PER D.RENAUD/D.SINISI

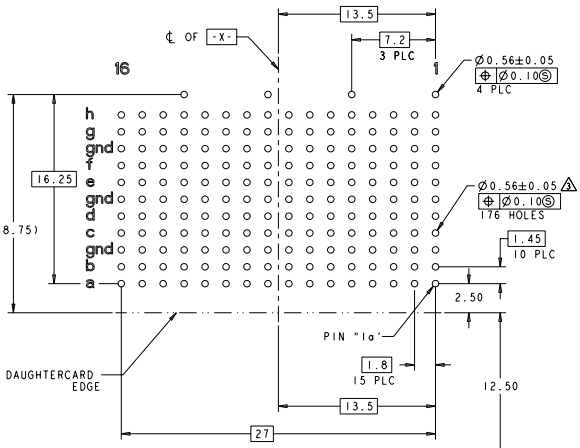

PC BOARD LAYOUT
(CONNECTOR SIDE)
SCALE 6:1

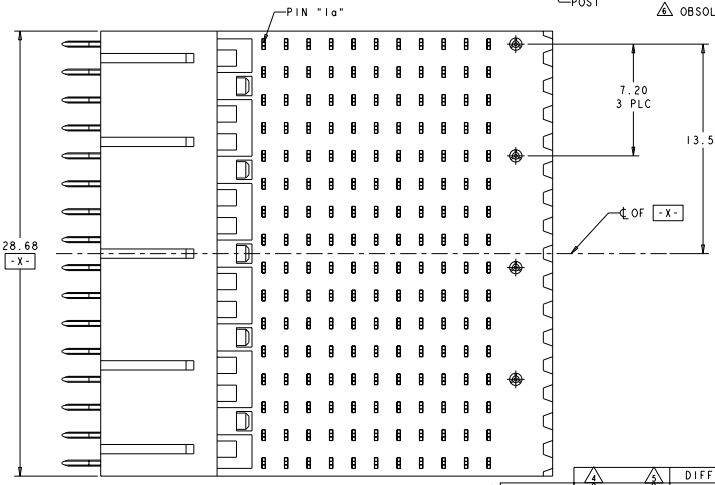

CONTACT TAIL/ HOLE FINISH		DESCRIPTION	PART NUMBER
4	5	DIFFERENTIAL, NONSEQUENTIAL	1410205-4
4	5	SINGLE END, NONSEQUENTIAL	1410205-3
2	3	DIFFERENTIAL, NONSEQUENTIAL	1410205-2
2	3	SINGLE END, NONSEQUENTIAL	1410205-1

6 OBSOLETE

DWN	04OCT2001	C. MORANA
CHK	20OCT2001	D. DEFIBAUGH
APVD	20OCT2001	P. MORANA
PRODUCT SPEC	108-2072	
APPLICATION SPEC	114-13056	
WEIGHT	-	

DIMENSIONS: mm
TOLERANCES UNLESS OTHERWISE SPECIFIED:
0 PLC ±-
1 PLC ±-
2 PLC ±0.13
3 PLC ±0.013
4 PLC ±-
ANGLES ±0°
FINISH 2
MATERIAL 1

Tyco Electronics Corporation
Harrisburg, PA 17105-3608

NAME: RIGHT ANGLE, PLUG ASSEMBLY CENTER, FULL, 20.3mm, MultiGig RT 1, DAUGHTERCARD CONNECTOR

SIZE A1 | CAGE CODE 00779 | DRAWING NO C-1410205 | RESTRICTED TO -

CUSTOMER DRAWING | SCALE 8:1 | SHEET 1 OF 1 | REV A1

AMP 4805 REV 31MAR2000
Pro/ENGINEER DRAWING

Downloaded from Elcodis.com electronic components distributor