THIS DRAWING IS UNPUBLISHED. RELEASED FOR PUBLICATION -.-.-
© COPYRIGHT - BY TYCO ELECTRONICS CORPORATION. ALL INTERNATIONAL RIGHTS RESERVED.

UOC	DIST
AD	00

REVISIONS

P	LTR	DESCRIPTION	DATE	DRN	APVD
	B	REV PER ECO-09-017741	10AUG09	DH	DY

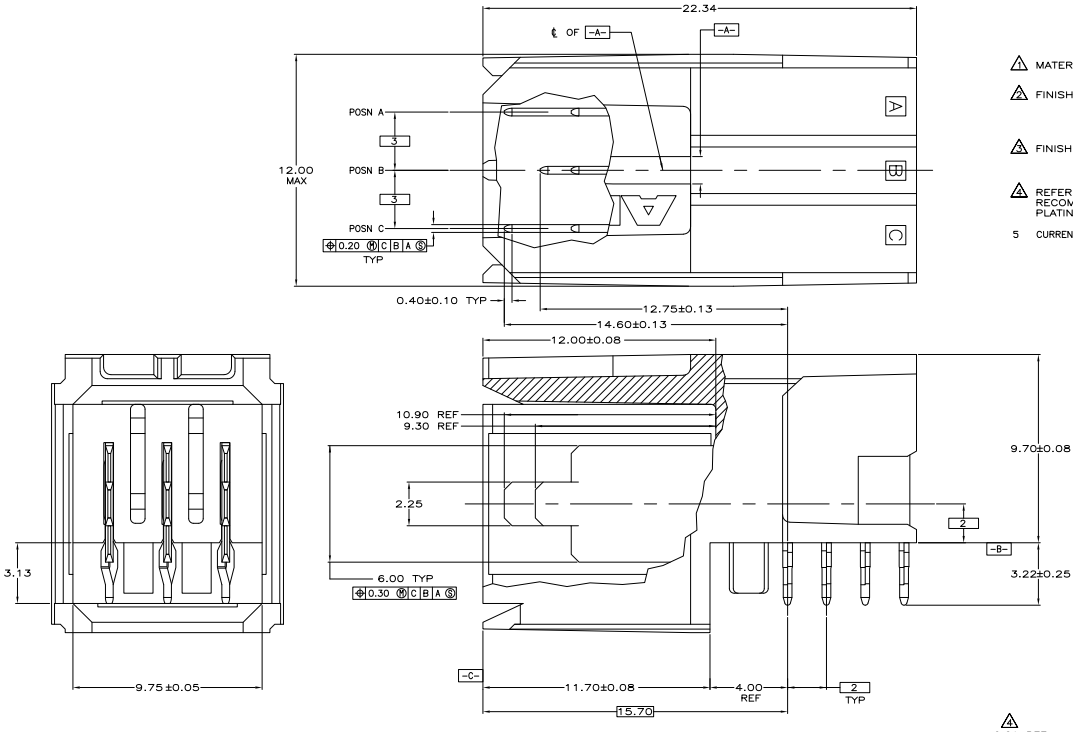

1. MATERIAL: HOUSING: POLYESTER. COLOR: GRAY. UL 94V-O.
   CONTACT: PHOSPHOR BRONZE.
2. FINISH: CONTACT MATING AREA: 1.27μm MIN GOLD OR 0.08μm MIN GOLD OVER 0.76μm MIN PALLADIUM-NICKEL.
   ACTION PIN AREA: 0.5μm MIN TIN PLATE.
   ALL OVER 1.27μm MIN NICKEL UNDERPLATE.
3. FINISH: CONTACT LUBRICATION WITH BELLCORE APPROVED LUBRICANT. TECHNICAL REFERENCE: TR-NWT-001217 ISSUE 1, SEPTEMBER 1992.
4. REFERENCE APPLICATION SPEC 114-1103 FOR RECOMMENDED PLATED THRU HOLE DIAMETER AND PLATING THICKNESS.

5 CURRENT RATING 10A/CONTACT PER PRODUCT SPEC 108-1651.

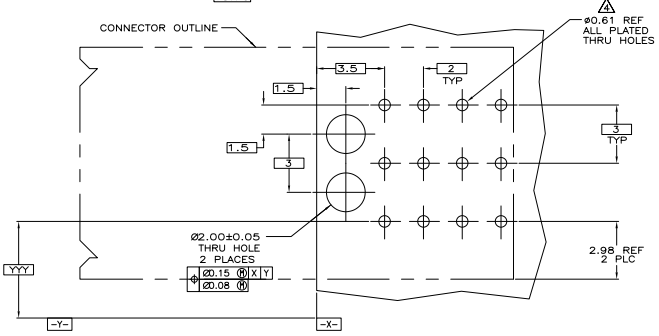

RECOMMENDED PCB HOLE LAYOUT

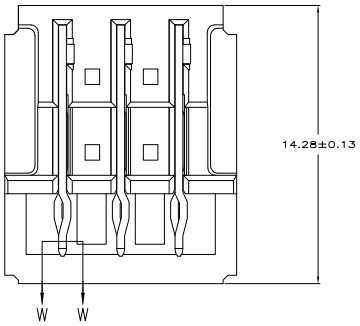

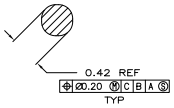

SECTION W-W
SCALE 40:1

PART NUMBER
5223962-1

THIS DRAWING IS A CONTROLLED DOCUMENT.

DIMENSIONS: mm

TOLERANCE UNLESS OTHERWISE SPECIFIED:
0 PLC ± –
1 PLC ± –
2 PLC ± 0.13
3 PLC ± –
4 PLC ± –
ANGLES ± –

MATERIAL 1

FINISH 2 3

TRN	B.CARBO	10DEC04
CHK	R.PATTERSON	10DEC04
APVD	R.PATTERSON	10DEC04
PRODUCT SPEC	–	
APPLICATION SPEC	–	
WEIGHT	–	

CUSTOMER DRAWING

Tyco Electronics Corporation
Harrisburg, PA 17105-3608

NAME: ASSEMBLY, RIGHT ANGLE HEADER, W/ RETENTION PEGS, SEQUENCED, UNIVERSAL POWER MODULE

SIZE	CAGE CODE	DRAWING NO	RESTRICTED TO
A1	00779	C-5223962	–

SCALE 10:1 SHEET 1 OF 1 REV B

Downloaded from Elcodis.com electronic components distributor