THIS DRAWING IS UNPUBLISHED. RELEASED FOR PUBLICATION 20
© COPYRIGHT 20 BY TYCO ELECTRONICS CORPORATION. ALL RIGHTS RESERVED.

LOC ES DIST 00

REVISIONS

P	LTR	DESCRIPTION	DATE	DRN	APVD
	T1	ADDED NEW DASH NUMBER -68	24AUG2009	HL	SY
	T2	ASSIGN NEW P/N -69 INSTEAD OF -68	03SEP2009	HL	SY
	T3	REV PER ECR-09-019574	04SEP2009	HL	SY
	T4	REV PER ECR-09-027917	18JAN2010	KT	SY

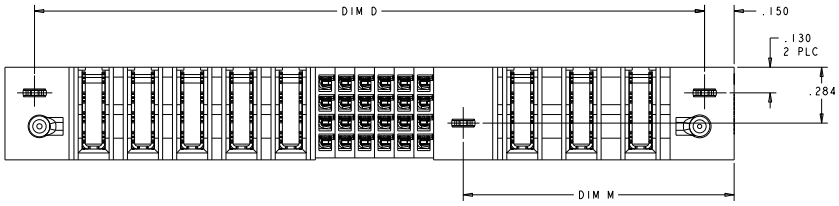

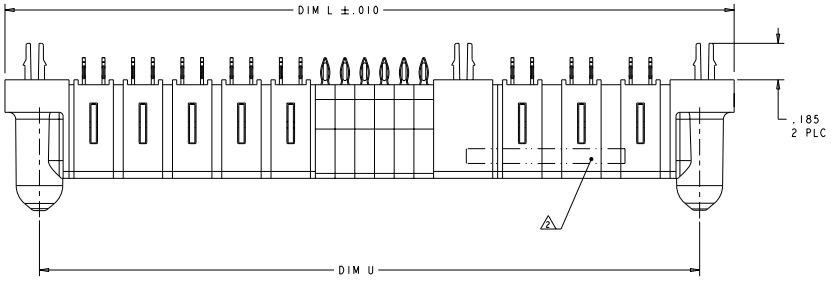

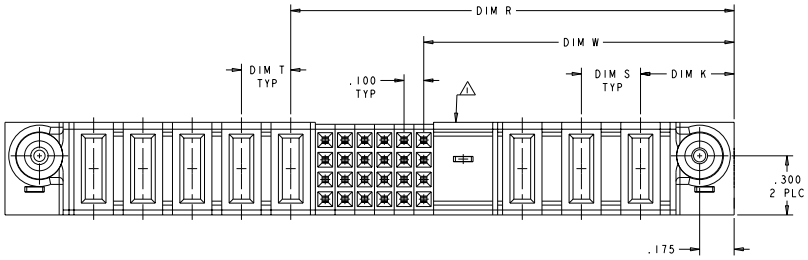

1. OPTIONAL CENTER MODULE, WITH Ø.150 THRU HOLE OR HOLD DOWN FEATURE
2. "AMP", PART NUMBER, AND DATE CODE TO BE MARKED IN AREA SHOWN MARKING ON BOTH SIDES PERMITTED FOR PARTS UNDER 2.00 LONG
3. MATERIAL: HOUSING - GLASS FILLED HIGH TEMP THERMO PLASTIC, UL94 V-0,BLACK
   SIGNAL CONTACT - HIGH CONDUCTIVITY COPPER ALLOY
   POWER CONTACT - HIGH CONDUCTIVITY COPPER ALLOY
4. CONTACT PLATING: SIGNAL CONTACTS - .000050 MIN Ni UNDER ALL
   .000030 MIN Au ON CONTACT AREA
   .000100 MIN Sn AT PCB INTERFACE
   POWER CONTACTS - .000050 MIN Ni UNDER ALL
   .000030 MIN Au ON CONTACT AREA
   .000100 MIN Sn AT PCB INTERFACE
5. MECHANICAL CONNECTOR KEEP OUT ZONE
6. DATUM AND BASIC DIMENSIONS ESTABLISHED BY CUSTOMER
7. PCB - ALL HOLE DIAMETERS ARE FINISHED HOLE SIZES
8. PCB - .0453 ±.0010 DRILLED HOLES PLATED WITH .0003 MIN Sn OVER .001 TO .003 PLATING TO ACHIEVE A .040 HOLE
9. VARIABLE DIMENSION SHOWN ON VIEW (SHEET 7,10)

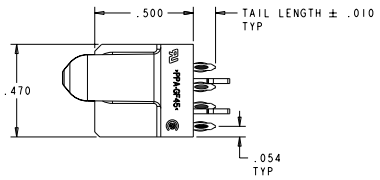

THIS DRAWING IS A CONFIDENTIAL DOCUMENT AND THE INFORMATION CONTAINED HEREIN MAY NOT BE DISCLOSED OR REPRODUCED WITHOUT THE PRIOR WRITTEN CONSENT OF TYCO ELECTRONICS CORPORATION.

DIMENSIONS: INCHES

TOLERANCES UNLESS OTHERWISE SPECIFIED:
0 PLC ±:
1 PLC ±:
2 PLC ±.01
3 PLC ±.005
4 PLC ±.0020
ANGLES ±2°

MATERIAL : 3
FINISH : 4

DWN D.GRZYBOWSKI 02MAY05
CHK W.PERCHERKE 02MAY05
APD W.PERCHERKE
PRODUCT SPEC 108-1973
APPLICATION SPEC 114-13038
WEIGHT -

Tyco Electronics Corporation
Shanghai,P.R.China,200233

NAME VERTICAL RECEPTACLE ASSEMBLY WITH GUIDES, MULTI-BEAM XL

SIZE A1 CAGE CODE 00779 DRAWING NO C-6450550 RESTRICTED TO -

CUSTOMER DRAWING SCALE 1:1 SHEET 1 OF 10 REV T4

AMP 4805 REV 31MAR2000
Pro/ENGINEER DRAWING

Downloaded from Elcodis.com electronic components distributor

THIS DRAWING IS UNPUBLISHED. RELEASED FOR PUBLICATION 20
© COPYRIGHT 20 BY TYCO ELECTRONICS CORPORATION. ALL RIGHTS RESERVED.

LOC	DIST
ES	00

REVISIONS

P	LTR	DESCRIPTION	DATE	DRN	APVD
	-	SEE SHEET 1	-	-	-

M	D	U	T	S	R	W	L	K	DESCRIPTION	PART NUMBER
-	2.350	2.300	.250	.250	1.700	1.175	2.650	.450	3P + 16S + 3P	6-6450550-9
-	2.650	2.600	.250	.250	2.000	1.125	2.950	.450	3P + 32S + 3P	6-6450550-7
-	2.050	2.000	.250	.250	1.650	.925	2.350	.450	2P + 24S + 2P	6-6450550-6
-	5.450	5.400	.250	.250	3.300	2.625	5.750	.450	9P + 24S + 9P	6-6450550-5
-	2.250	2.20	.250	.250	1.350	.875	2.550	.450	2P + 16S + 4P	6-6450550-4
-	4.450	4.400	.250	.250	2.800	2.125	4.750	.450	7P + 24S + 7P	6-6450550-3
-	-	3.950	.250	.200	2.125	1.025	4.300	.425	3P + 40S + 8P	6-6450550-2
-	5.450	5.400	.250	.250	3.300	2.625	5.750	.450	9P + 24S + 9P	6-6450550-1
-	3.300	3.250	.250	.250	2.400	1.675	3.600	.450	5P + 24S + 4P	6-6450550-0
-	3.300	3.250	.250	.250	2.150	1.425	3.600	.450	4P + 24S + 5P	5-6450550-9
-	2.150	2.100	-	.250	1.750	.875	2.450	.450	2P + 32S + 2P	5-6450550-8
-	3.050	3.000	.250	.250	2.150	1.425	3.350	.450	4P + 24S + 4P	5-6450550-7
-	2.250	2.200	.200	.200	1.725	1.025	2.550	.425	3P + 24S + 3P	5-6450550-6
-	3.300	3.250	.250	.250	2.150	1.425	3.600	.450	4P + 24S + 5P	5-6450550-5
-	2.250	2.200	.250	.250	1.350	.875	2.550	.450	2P + 16S + 4P	5-6450550-4
-	-	3.050	.250	.300	1.950	1.275	3.400	.475	3ACP + 24S + 5P	5-6450550-3
-	1.950	1.900	.250	.250	1.550	.875	2.250	.450	2P +24S + 2P	5-6450550-0
-	-	6.300			3.925	3.275	6.650	.425	14P + 24S + 12P	4-6450550-9
-	1.950	1.900	.250	.250	1.550	.875	2.250	.450	2P + 24S + 2P	4-6450550-7
-	3.950	3.900	.250	.250	2.550	1.875	4.250	.450	6P + 24S + 6P	4-6450550-5
-	-	3.100	.200	.200	2.225	1.375	3.450	.425	5P + 32S + 5P	3-6450550-5
-	-	5.450			3.075	2.425	5.800	.425	10P + 24S + 12P	3-6450550-2
-	3.350	3.300	.250	.250	2.450	1.375	3.650	.450	4P + 40S + 4P	2-6450550-9
-	-	3.100	.200	.200	2.225	1.375	3.450	.425	5P + 32S + 5P	2-6450550-8
-	-	2.100	.250	.300	1.750	1.275	2.450	.475	3ACP + 16S + 2P	2-6450550-4
-	-	2.250	.250	.200	1.900	1.225	2.600	.450	4P + 24S + 2P	1-6450550-9
-	4.325	4.275	.250		3.175	2.500	4.625	.475	2ACP + 6P + 24S + 5P	1-6450550-8
-	-	1.575	-	.250	1.425	.700	1.925	.475	1P +24S + 1P	1-6450550-7
-	-	2.500	.250	.250	2.150	1.425	2.850	.450	4P + 24S + 2P	1-6450550-6
T4 -	2.850	2.800	.300	.250	2.075	1.375	3.150	.450	4P + 24S + 3ACP	1-6450550-4
-	3.550	3.500	.200	.200	2.225	1.775	3.850	.425	7P + 16S + 7P	1-6450550-3
-	4.450	4.400	.250	.250	4.050	.875	4.750	.450	2P + 124S + 2P	1-6450550-2
-	4.550	4.500	.250	.300	1.650	.975	4.850	.475	2ACP + 24S + 12P	1-6450550-1
-	2.550	2.500	.250	.250	2.150	.875	2.850	.450	2P + 48S + 2P	1-6450550-0
-	-	4.050	.300	.250	3.350	2.875	4.400	.450	10P + 16S + 3ACP	6450550-8
-	-	3.950	.250	.200	2.125	1.025	4.300	.425	3P + 40S + 8P	6450550-7
-	-	4.050	-	.250	3.950	.875	4.400	.450	2P + 120S + 1P	6450550-6
-	-	3.250	-	.250	3.150	.875	3.600	.450	2P + 88S + 1P	6450550-5
-	-	1.400	-	-	1.300	.625	1.750	.450	1P + 24S + 1P	6450550-4
-	-	2.900	.250	.250	2.550	.875	3.250	.450	2P + 64S + 2P	6450550-3
-	-	2.550	.300	.250	1.825	1.125	2.900	.450	3P + 24S + 3ACP	6450550-2
-	-	3.050	.250	.300	1.950	1.275	3.400	.475	3ACP + 24S + 5P	6450550-1

DRN R.GRZYBOWSKI 02MAY05
CHK W.PERCHERKE 02MAY05
APPD W.PERCHERKE
PRODUCT SPEC 108-1973
APPLICATION SPEC 114-13038
WEIGHT -

DIMENSIONS: INCHES

TOLERANCES UNLESS OTHERWISE SPECIFIED:
0 PLC ±-
1 PLC ±-
2 PLC ±0.01
3 PLC ±0.005
ANGLES ±0.5°
FINISH -

MATERIAL -

Tyco Electronics Corporation
Shanghai, P.R.China.200233

NAME VERTICAL RECEPTACLE ASSEMBLY WITH GUIDES, MULTI-BEAM XL

SIZE A1 | CAGE CODE 00779 | DRAWING NO C-6450550 | RESTRICTED TO -

CUSTOMER DRAWING | SCALE 1:1 | SHEET 2 OF 10 | REV T4

AMP 4805 REV 31MAR2000

Downloaded from Elcodis.com electronic components distributor

THIS DRAWING IS UNPUBLISHED. RELEASED FOR PUBLICATION 20
© COPYRIGHT 20 BY TYCO ELECTRONICS CORPORATION. ALL RIGHTS RESERVED.

LOC	DIST
ES	00

REVISIONS

P	LTR	DESCRIPTION	DATE	DRN	APVD
	-	SEE SHEET 1	-	-	-

PART NUMBER	ROWS	POWER (L)					SIGNAL												POWER (R)		
		P8	P7	P6	P5	P4	6	5	4	3	2	1							P3	P2	P1
6450550-1	D C B A	GS	GS	GS	GS	GS	AP AP AP AP	AP AP AP AP	AP AP AP AP	AP AP AP AP	AP AP AP AP	AP AP AP AP							GP	GS	GS

3ACP + 24S + 5P

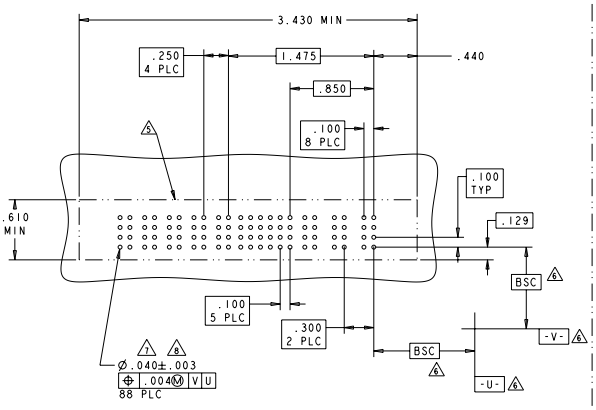

PART NUMBER	ROWS	POWER (L)		SIGNAL																POWER (R)	
		P4	P3	16	15	14	13	12	11	10	9	8	7	6	5	4	3	2	1	P2	P1
6450550-3	D C B A	GP	GS	AP AP AP AP	AP AP AP AP	AP AP AP AP	AP AP AP AP	AP AP AP AP	AP AP AP AP	AP AP AP AP	AP AP AP AP	AP AP AP AP	AP AP AP AP	AP AP AP AP	AP AP AP AP	AP AP AP AP	AP AP AP AP	AP AP AP AP	AP AP AP AP	GS	GP

2P + 64S + 2P

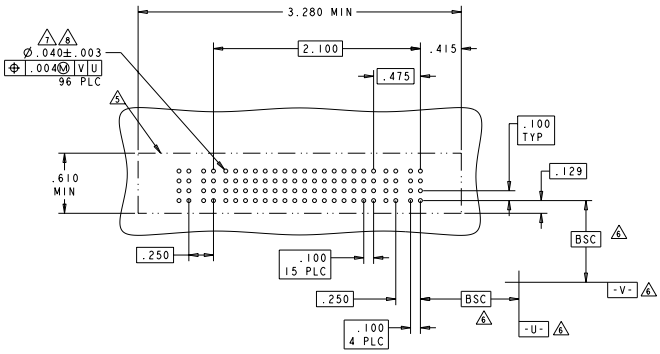

PART NUMBER	ROWS	POWER (L)			SIGNAL								POWER (R)		
		P6	P5	P4	6	5	4	3	2	1			P3	P2	P1
6450550-2	D C B A	GP	GS	GS	AP AP AP AP	AP AP AP AP	AP AP AP AP	AP AP AP AP	AP AP AP AP	AP AP AP AP			GS	GS	GS

3P + 24S + 3ACP

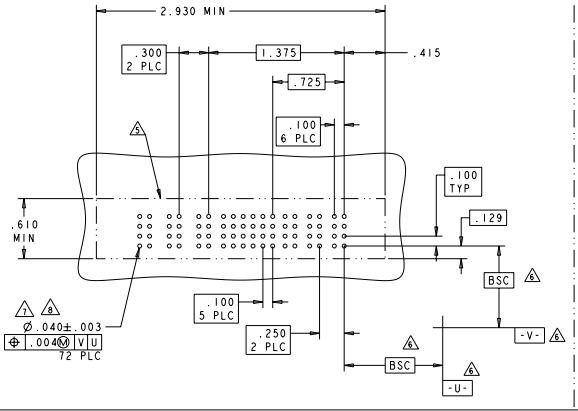

PART NUMBER	ROWS	POWER (L)	SIGNAL							POWER (R)
		P2	6	5	4	3	2	1	P1	
6450550-4	D C B A	GP	AP AP AP AP	AP AP AP AP	AP AP AP AP	AP AP AP AP	AP AP AP AP	AP AP AP AP		GP

1P + 24S + 1P

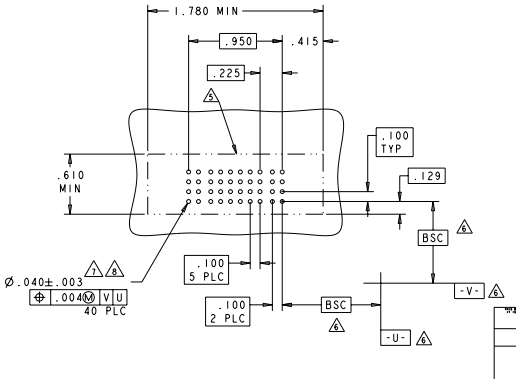

CODE	DESCRIPTION	TAIL LENGTH
VP	POWER CONTACT MFBL	.115
VS	POWER CONTACT STD	.115
P	SINGAL CONTACT	.115
AT	SIGNAL CONTACT	.135
PT	POWER CONTACT MFBL	.135
ST	POWER CONTACT STD	.135
BP	SIGNAL CONTACT	.165
HS	POWER CONTACT, STD	.165
HP	POWER CONTACT, MFBL	.165
AP	SIGNAL CONTACT	.135
GS	POWER CONTACT, STD	.135
GP	POWER CONTACT, MFBL	.135

CONTACT TALE

THIS DRAWING IS A CONFIDENTIAL DOCUMENT AND THE PROPERTY OF TYCO ELECTRONICS CORPORATION. IT IS MADE AVAILABLE ON THE UNDERSTANDING THAT IT WILL NOT BE DISCLOSED OR MADE OR TAKEN USE FOR ANY OTHER PURPOSE.

DIMENSIONS: INCHES

TOLERANCES UNLESS OTHERWISE SPECIFIED:
0 PLC ±-
1 PLC ±-
2 PLC ±.01
3 PLC ±.005
4 PLC ±.0020
ANGLES ±2°
FINISH :

MATERIAL :

DR	R.GRZYBOWSKI	02MAY05
CHK	W.PERCHERKE	02MAY05
APVD	W.PERCHERKE	
PRODUCT SPEC	108-1973	
APPLICATION SPEC	114-13038	
WEIGHT	-	

Tyco Electronics Corporation
Shanghai,P.R.China.200233

NAME: VERTICAL RECEPTACLE ASSEMBLY WITH GUIDES, MULTI-BEAM XL

SIZE	CAGE CODE	DRAWING NO	RESTRICTED TO
A1		00779©-6450550	-

CUSTOMER DRAWING SCALE 1:1 SHEET 3 OF 10 REV T4

AMP 4805 REV 31MAR2000

Downloaded from Elcodis.com electronic components distributor

THIS DRAWING IS UNPUBLISHED. RELEASED FOR PUBLICATION 20
© COPYRIGHT 20 BY TYCO ELECTRONICS CORPORATION. ALL RIGHTS RESERVED.

LOC	DIST
ES	00

REVISIONS					
P	LTR	DESCRIPTION	DATE	DWN	APVD
	-	SEE SHEET 1	-	-	-

PART NUMBER	ROWS	POWER (L) P3	22	21	20	19	18	17	16	15	14	13	12	11	10	9	8	7	6	5	4	3	2	1	POWER (R) P2	P1
6450550-5	D	GP	AP	AP	AP	AP	AP	AP	AP	AP	AP	AP	AP	AP	AP	AP	AP	AP	AP	AP	AP	AP	AP	AP	GS	GP
	C		AP	AP	AP	AP	AP	AP	AP	AP	AP	AP	AP	AP	AP	AP	AP	AP	AP	AP	AP	AP	AP	AP		
	B		AP	AP	AP	AP	AP	AP	AP	AP	AP	AP	AP	AP	AP	AP	AP	AP	AP	AP	AP	AP	AP	AP		
	A		AP	AP	AP	AP	AP	AP	AP	AP	AP	AP	AP	AP	AP	AP	AP	AP	AP	AP	AP	AP	AP	AP		
2P + 88S + 1P																										

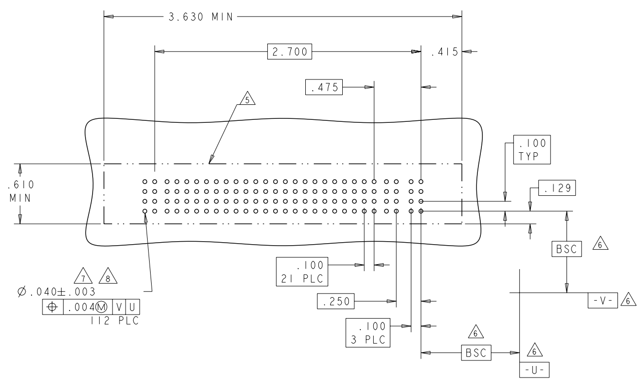

PART NUMBER	ROWS	POWER P11	P10	P9	P8	P7	P6	P5	P4	SIGNAL 10	9	8	7	6	5	4	3	2	1	POWER P3	P2	P1
6450550-7	D	GS	GS	GP	GP	GS	GS	GP	GP	AP	AP	AP	AP	AP	AP	AP	AP	AP	AP	GS	GP	GS
	C									AP	AP	AP	AP	AP	AP	AP	AP	AP	AP			
	B									AP	AP	AP	AP	AP	AP	AP	AP	AP	AP			
	A									AP	AP	AP	AP	AP	AP	AP	AP	AP	AP			
3P + 40S + 8P																						

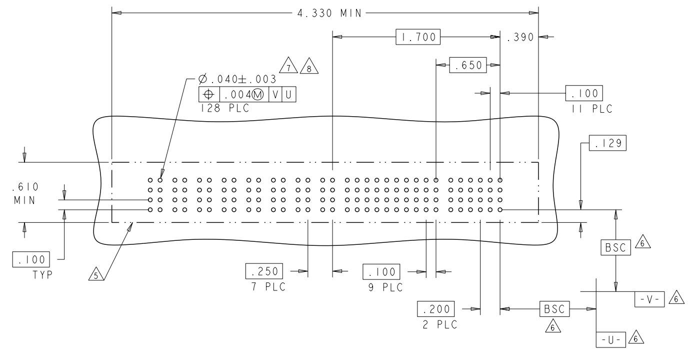

PART NUMBER	ROWS	POWER (L) P3	30	29	28	27	26	25	24	23	22	21	20	19	18	17	16	15	14	13	12	11	10	9	8	7	6	5	4	3	2	1	POWER (R) P2	P1
6450550-6	D	GP	AP	AP	AP	AP	AP	AP	AP	AP	AP	AP	AP	AP	AP	AP	AP	AP	AP	AP	AP	AP	AP	AP	AP	AP	AP	AP	AP	AP	AP	AP	GS	GP
	C		AP	AP	AP	AP	AP	AP	AP	AP	AP	AP	AP	AP	AP	AP	AP	AP	AP	AP	AP	AP	AP	AP	AP	AP	AP	AP	AP	AP	AP	AP		
	B		AP	AP	AP	AP	AP	AP	AP	AP	AP	AP	AP	AP	AP	AP	AP	AP	AP	AP	AP	AP	AP	AP	AP	AP	AP	AP	AP	AP	AP	AP		
	A		AP	AP	AP	AP	AP	AP	AP	AP	AP	AP	AP	AP	AP	AP	AP	AP	AP	AP	AP	AP	AP	AP	AP	AP	AP	AP	AP	AP	AP	AP		
2P + 120S + 1P																																		

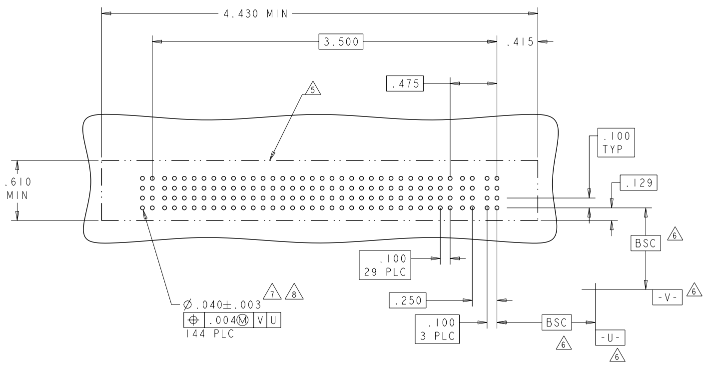

THIS DRAWING IS A CONTROLLED DOCUMENT FOR TYCO ELECTRONICS CORPORATION. IT IS SUBJECT TO CHANGE AND THE CONTROLLING ENGINEERING ORGANIZATION SHOULD BE CONTACTED FOR THE LATEST REVISION.

DWN	R.GRZYBOWSKI 02MAY05
CHK	M.PERCHERKE 02MAY05
APVD	M.PERCHERKE -
PRODUCT SPEC	108-1973
APPLICATION SPEC	114-13038
WEIGHT	-
DIMENSIONS	INCHES
TOLERANCES UNLESS OTHERWISE SPECIFIED	0 PLC ±-; 1 PLC ±-; 2 PLC ±.01; 3 PLC ±.005; 4 PLC ±.0020; ANGLES ±2°
MATERIAL	- -
FINISH	- -

Tyco Electronics Corporation
Shanghai.P.R.China.200233

NAME: VERTICAL RECEPTACLE ASSEMBLY WITH GUIDES, MULTI-BEAM XL
-

SIZE	CAGE CODE	DRAWING NO	RESTRICTED TO
A1	00779	C-6450550	-

CUSTOMER DRAWING

SCALE	SHEET	REV
1:1	4 OF 19	T4

Downloaded from Elcodis.com electronic components distributor

THIS DRAWING IS UNPUBLISHED. RELEASED FOR PUBLICATION 20
© COPYRIGHT 20 BY TYCO ELECTRONICS CORPORATION. ALL RIGHTS RESERVED.

LOC	DIST
ES	00

REVISIONS

P	LTR	DESCRIPTION	DATE	DWN	APVD
	-	SEE SHEET 1	-	-	-

PART NUMBER	ROWS	POWER			SIGNAL					POWER													
		P13	P12	P11	4	3	2	1	P10	P9	P8	P7	P6	P5	P4	P3	P2	P1
6450550-8	D C B A	GS	GS	GP	AP AP AP AP AP AP AP AP AP AP AP AP AP AP AP AP					GS	GS	GS	GS	GS	GS	GS	GS	GS
10P + 16S + 3ACP																		

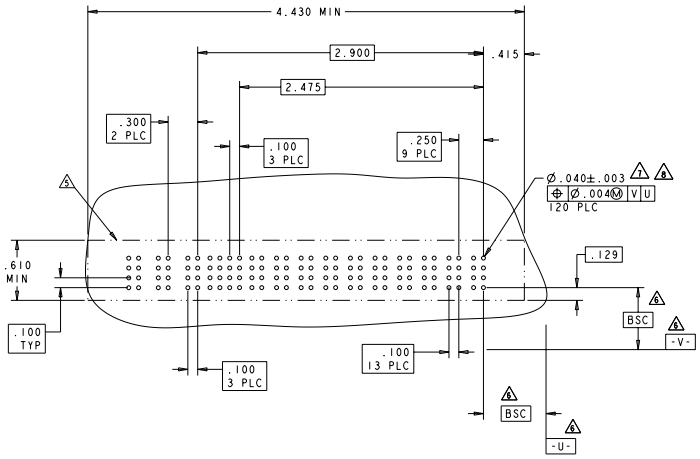

PART NUMBER	ROWS	POWER (L)																		SIGNAL						POWER (R)	
		P14	P13	P12	P11	P10	P9	P8	P7	P6	P5	P4	P3	6	5	4	3	2	1	P2	P1
1-6450550-1	D C B A	HD	GS	GS	GS	GS	GS	GS	GS	GS	GS	GS	GS	GS	AP AP AP AP AP AP AP AP AP AP AP AP AP AP AP AP					GP	GP	HD
2ACP + 24S + 12P																											

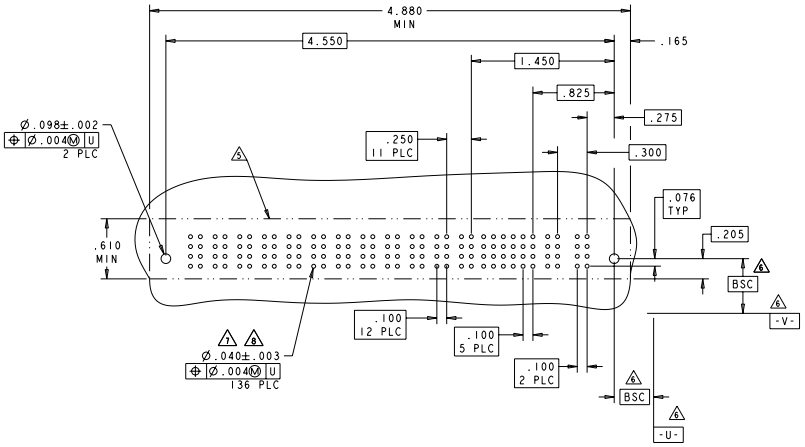

PART NUMBER	ROWS	POWER		SIGNAL														POWER	
		P4	P3	12	11	10	9	8	7	6	5	4	3	2	1	P2	P1
1-6450550-0	D C B A	HD	GS	GP	AP AP AP AP AP AP AP AP AP AP AP AP AP AP AP AP											GP	GS	HD
2P + 48S + 2P																		

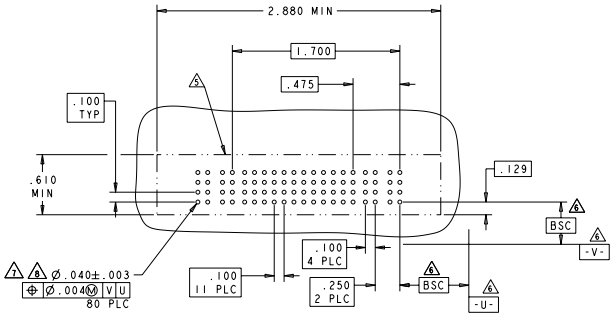

DIMENSIONS: INCHES	TOLERANCES UNLESS OTHERWISE SPECIFIED: 0 PLC ±: 1 PLC ±: 2 PLC ±: 0.01 3 PLC ±: 0.005 4 PLC ±: 0.0025 ANGLES ±: 30'	DRN R.GRZYBOWSKI 02MAY05 CHK W.PERCHERKE 02MAY05 APD W.PERCHERKE PRODUCT SPEC 108-1973 APPLICATION SPEC 114-13038 WEIGHT - FINISH -	Tyco Electronics Corporation Shanghai, P.R.China.200233 NAME VERTICAL RECEPTACLE ASSEMBLY WITH GUIDES, MULTI-BEAM XL
MATERIAL -			SIZE A1 CAGE CODE 00779 DRAWING NO C-6450550 RESTRICTED TO -
		CUSTOMER DRAWING	SCALE 1:1 SHEET 5 OF 10 REV T4

AMP 4805 REV 31MAR2000

Downloaded from Elcodis.com electronic components distributor

THIS DRAWING IS UNPUBLISHED. RELEASED FOR PUBLICATION 20
© COPYRIGHT 20 BY TYCO ELECTRONICS CORPORATION. ALL RIGHTS RESERVED.

LOC	DIST
ES	00

REVISIONS					
P	LTR	DESCRIPTION	DATE	DWN	APVD
	-	SEE SHEET 1	-	-	-

PART NUMBER	ROWS		POWER		SIGNAL																															POWER		
			P4	P3	31	30	29	28	27	26	25	24	23	22	21	20	19	18	17	16	15	14	13	12	11	10	9	8	7	6	5	4	3	2	1	P2	P1	
1-6450550-2	D		GP	GP	AP	AP	AP	AP	AP	AP	AP	AP	AP	AP	AP	AP	AP	AP	AP	AP	AP	AP	AP	AP	AP	AP	AP	AP	AP	AP	AP	AP	AP	AP	AP	GS	GS	
	C	HD			AP	AP	AP	AP	AP	AP	AP	AP	AP	AP	AP	AP	AP	AP	AP	AP	AP	AP	AP	AP	AP	AP	AP	AP	AP	AP	AP	AP	AP	AP	AP			HD
	B				AP	AP	AP	AP	AP	AP	AP	AP	AP	AP	AP	AP	AP	AP	AP	AP	AP	AP	AP	AP	AP	AP	AP	AP	AP	AP	AP	AP	AP	AP	AP			
	A				AP	AP	AP	AP	AP	AP	AP	AP	AP	AP	AP	AP	AP	AP	AP	AP	AP	AP	AP	AP	AP	AP	AP	AP	AP	AP	AP	AP	AP	AP	AP			
2P + 124S + 2P																																						

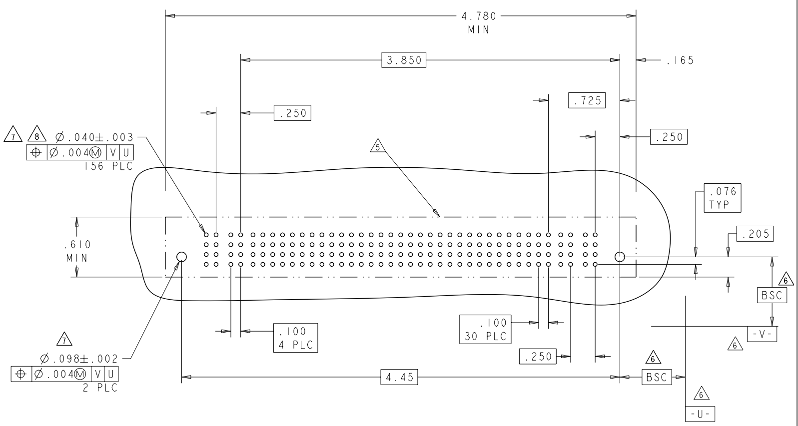

PART NUMBER	ROWS		POWER							SIGNAL				POWER							
			P14	P13	P12	P11	P10	P9	P8	4	3	2	1	P7	P6	P5	P4	P3	P2	P1	
1-6450550-3	D		GS	GS	GS	GS	GS	GS	GS	AP	AP	AP	AP	GP	GP	GP	GP	GP	GP	GP	
	C									AP	AP	AP	AP								
	B									AP	AP	AP	AP								
	A	HD								AP	AP	AP	AP								HD
7P + 16S + 7P																					

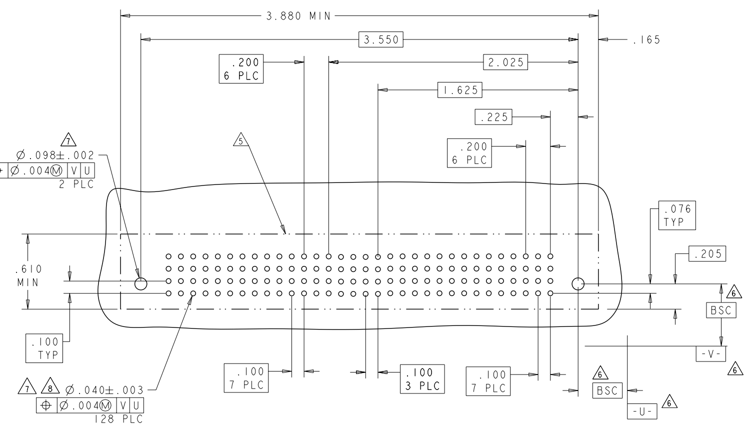

PART NUMBER	ROWS		POWER		SIGNAL						POWER				
			P6	P5	6	5	4	3	2	1	P4	P3	P2	P1	
1-6450550-6	D		GP	GS	AP	AP	AP	AP	AP	AP	GS	GP	GS	GP	
	C				AP	AP	AP	AP	AP	AP					
	B				AP	AP	AP	AP	AP	AP					
	A				AP	AP	AP	AP	AP	AP					
4P + 24S + 2P															

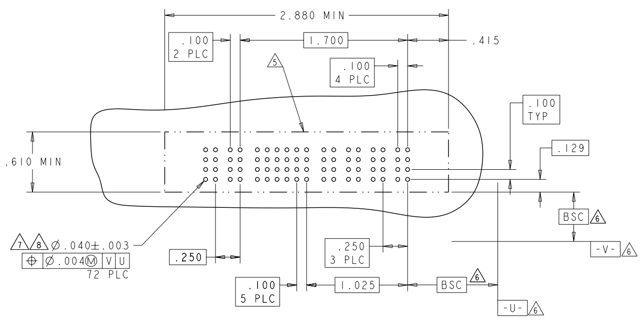

THIS DRAWING IS A CONTROLLED DOCUMENT FOR TYCO ELECTRONICS CORPORATION. IT IS SUBJECT TO CHANGE AND THE CONTROLLING ENGINEERING ORGANIZATION SHOULD BE CONTACTED FOR THE LATEST REVISION.

DWN	R.GRZYBOWSKI 02MAY05
CHK	M.PERCHERKE 02MAY05
APVD	M.PERCHERKE -
PRODUCT SPEC	108-1973
APPLICATION SPEC	114-13038
WEIGHT	-
DIMENSIONS:	INCHES
TOLERANCES UNLESS OTHERWISE SPECIFIED:	0 PLC ±- ; 1 PLC ±- ; 2 PLC ±.01 ; 3 PLC ±.005 ; 4 PLC ±.0020 ; ANGLES ±2°
MATERIAL	- -
FINISH	- -

Tyco Electronics Corporation
Shanghai.P.R.China.200233

NAME: VERTICAL RECEPTACLE ASSEMBLY WITH GUIDES, MULTI-BEAM XL
-

SIZE	CAGE CODE	DRAWING NO	RESTRICTED TO
A1	00779	C-6450550	-

	SCALE	SHEET	REV
CUSTOMER DRAWING	1:1	6 OF 19	T4

Downloaded from Elcodis.com electronic components distributor

THIS DRAWING IS UNPUBLISHED. RELEASED FOR PUBLICATION 20
© COPYRIGHT 20 BY TYCO ELECTRONICS CORPORATION. ALL RIGHTS RESERVED.

LOC	DIST
ES	00

REVISIONS

#	LTR	DESCRIPTION	DATE	DWN	APVD
	-	SEE SHEET 1	-	-	-

PART NUMBER	ROWS	POWER				SIGNAL						POWER						
		P13	P12	P11	P10	P9	6	5	4	3	2	1	P8	P7	P6	P5	P4	P3	P2	P1
1-6450550-8	D C B A	GP	GS	GS	GS	GS	AP AP AP AP AP AP						GS	GS	GS	GS	GP	GP	GS	GS
2ACP + 6P + 24S + 5P																				

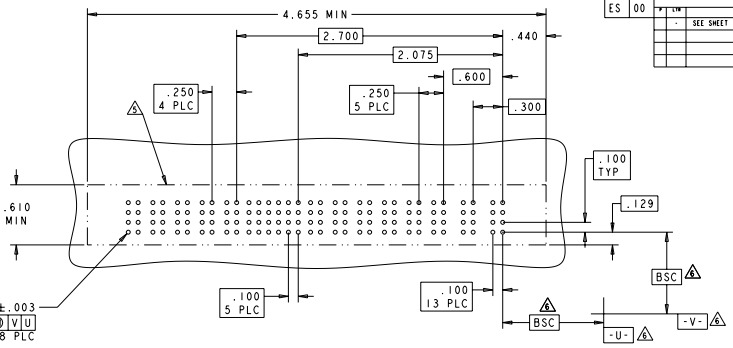

PART NUMBER	ROWS	POWER		SIGNAL						POWER			
		P6	P5	6	5	4	3	2	1	P4	P3	P2	P1
1-6450550-9	D C B A	GP	GS	AP AP AP AP AP AP						GS	GP	GP	GS
4P + 24S + 2P													

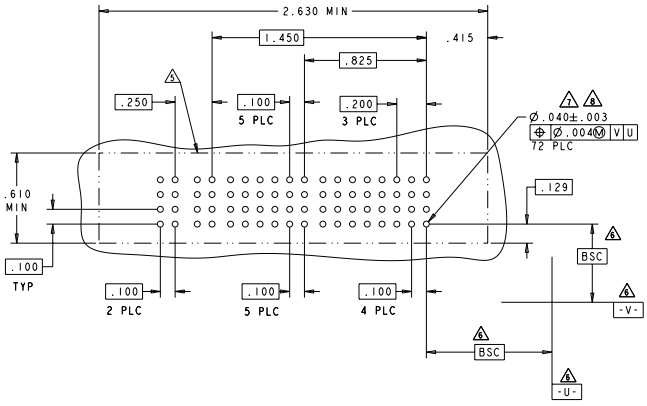

PART NUMBER	ROWS	POWER		SIGNAL			POWER		
		P5	P4	4	3	2	1	P3	P2	P1
2-6450550-4	D C B A	GS	GS	AP AP AP AP AP AP				GP	GS	GS
3ACP + 16S + 2P										

CONTACTS NOT LOADED

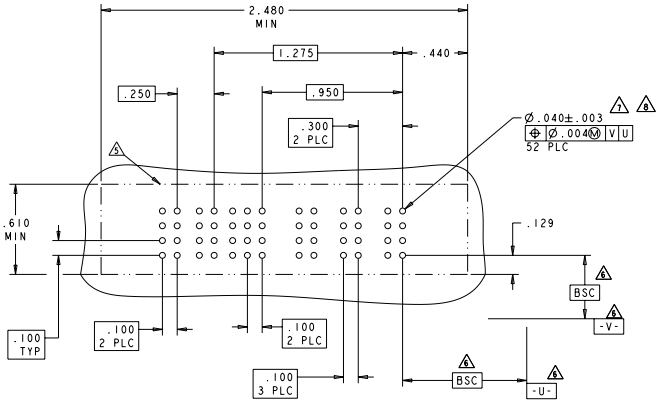

DRN	D.GRZYBOWSKI	02MAY05	Tyco Electronics Corporation Shanghai, P.R.China.200233
CHK	W.PERCHERKE	02MAY05	
APD	W.PERCHERKE		VERTICAL RECEPTACLE ASSEMBLY WITH GUIDES, MULTI-BEAM XL
PRODUCT SPEC	108-1973		
APPLICATION SPEC	114-13038		
WEIGHT	-		
FINISH	-		
MATERIAL	-		
DIMENSIONS: INCHES	TOLERANCES UNLESS OTHERWISE SPECIFIED: 0 PLC ±- / 1 PLC ±- / 2 PLC ±.01 / 3 PLC ±.005 / 4 PLC ±.0020 / ANGLES ±2°		

SIZE	CAGE CODE	DRAWING NO	RESTRICTED TO
A		00779-6450550	-

CUSTOMER DRAWING — SCALE 1:1 — SHEET 7 OF 10 — REV 4

AMP 4805 REV 31MAR2000

Downloaded from Elcodis.com electronic components distributor

THIS DRAWING IS UNPUBLISHED. RELEASED FOR PUBLICATION 20
© COPYRIGHT 20 BY TYCO ELECTRONICS CORPORATION. ALL RIGHTS RESERVED.

LOC	DIST
ES	00

REVISIONS

#	LTR	DESCRIPTION	DATE	DRN	APVD
	-	SEE SHEET 1	-	-	-

PART NUMBER	ROWS	POWER					SIGNAL								POWER				
		P10	P9	P8	P7	P6	8	7	6	5	4	3	2	1	P5	P4	P3	P2	P1
2-6450550-8	D	HP	HS	HP	HS	HP	BP	BP	BP	BP	BP	BP	BP	BP	HS	HP	HS	HP	HS
	C						BP	BP	BP	BP	BP	BP	BP	BP					
	B						BP	BP	BP	BP	BP	BP	BP	BP					
	A						BP	BP	BP	BP	BP	BP	BP	BP					
5P + 32S + 5P																			

HD

PART NUMBER	ROWS	POWER					SIGNAL								POWER				
		P10	P9	P8	P7	P6	8	7	6	5	4	3	2	1	P5	P4	P3	P2	P1
3-6450550-5	D	HP	HS	HP	HS	HP	BP	BP	BP	BP	BP	BP	BP	BP	HS	HP	HS	HP	HS
	C						BP	BP	BP	BP	BP	BP	BP	BP					
	B						BP	BP	BP	BP	BP	BP	BP	BP					
	A						BP	BP	BP	BP	BP	BP	BP	BP					
5P + 32S + 5P																			

HD

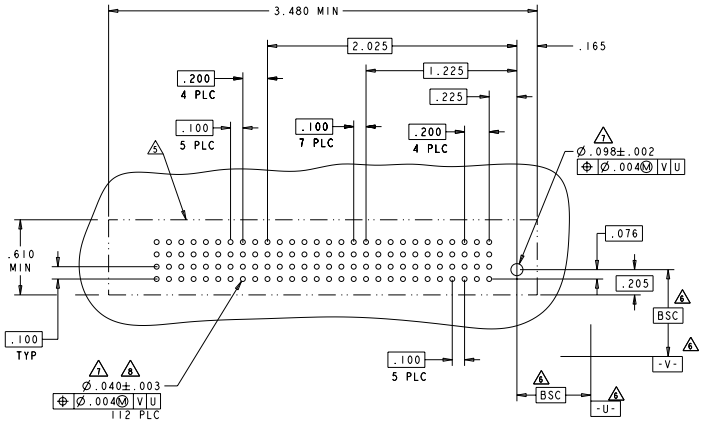

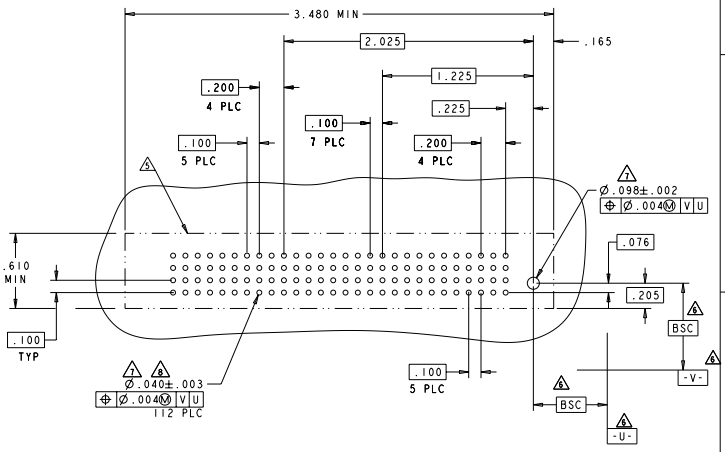

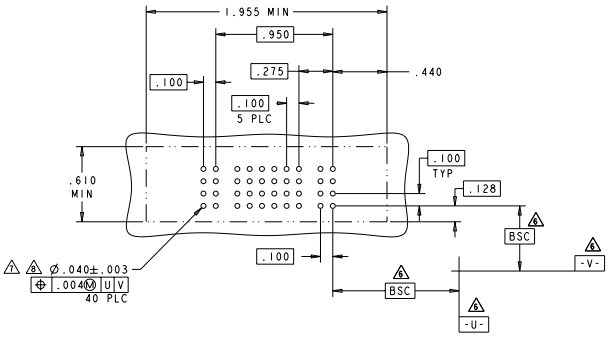

PART NUMBER	ROWS	POWER (L)	SIGNAL						POWER (R)	
		P2	6	5	4	3	2	1	P1	
1-6450550-7	D	GS	AP	AP	AP	AP	AP	AP	GP	
	C		AP	AP	AP	AP	AP	AP		
	B		AP	AP	AP	AP	AP	AP		
	A		AP	AP	AP	AP	AP	AP		
1P + 24S + 1P										

DIMENSIONS: INCHES	TOLERANCES UNLESS OTHERWISE SPECIFIED: 0 PLC ±- / 1 PLC ±- / 2 PLC ±0.01 / 3 PLC ±0.005 / 4 PLACES ±0.0025 / FINISH ±2°	MATERIAL - / FINISH -

DWN	R.GRZYBOWSKI	02MAY05
CHK	W.PERCHERKE	02MAY05
APD	W.PERCHERKE	-
PRODUCT SPEC	108-1973	
APPLICATION SPEC	114-13038	
WEIGHT	-	

CUSTOMER DRAWING

Tyco Electronics Corporation
Shanghai, P.R.China.200233

NAME: VERTICAL RECEPTACLE ASSEMBLY WITH GUIDES, MULTI-BEAM XL

SIZE	CAGE CODE	DRAWING NO	RESTRICTED TO
A1	00779	C-6450550	-

SCALE 1:1 SHEET 8 OF 19 REV 4

AMP 4805 REV 31MAR2000

Downloaded from Elcodis.com electronic components distributor

THIS DRAWING IS UNPUBLISHED. RELEASED FOR PUBLICATION 20
© COPYRIGHT 20 BY TYCO ELECTRONICS CORPORATION. ALL RIGHTS RESERVED.

LOC	DIST
ES	00

REVISIONS

P	LTR	DESCRIPTION	DATE	DWN	APVD
	-	SEE SHEET 1	-	-	-

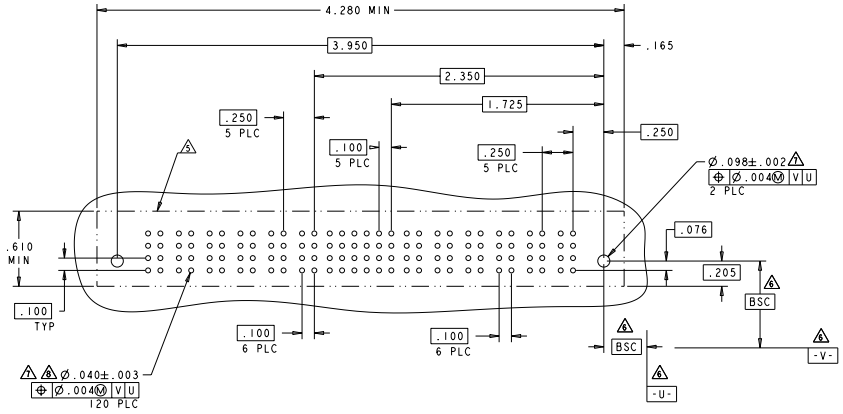

ASSY PART NUMBER	ROWS
4-6450550-5	D C B A
6P + 24S + 6P	

POWER						SIGNAL						POWER					
P12	P11	P10	P9	P8	P7	6	5	4	3	2	1	P6	P5	P4	P3	P2	P1
GS	GS	GS	GS	GS	GS	AP	AP	AP	AP	AP	AP	GS	GS	GS	GS	GS	GS
						AP	AP	AP	AP	AP	AP						
						AP	AP	AP	AP	AP	AP						
						AP	AP	AP	AP	AP	AP						

HD HD

PART NUMBER	ROWS
3-6450550-2	D C B A
10P + 24S + 12P	

POWER												SIGNAL						POWER											
P22	P21	P20	P19	P18	P17	P16	P15	P14	P13	P12	P11	6	5	4	3	2	1	P10	P9	P8	P7	P6	P5	P4	P3	P2	P1
HS	HS	HS	HS	HS	HS	HS	HS	HP	HP	HP	HP	BP	BP	BP	BP	BP	BP	HP	HP	HP	HP	HP	HP	HS	HS	HP	HS
												BP	BP	BP	BP	BP	BP										
												BP	BP	BP	BP	BP	BP										
												BP	BP	BP	BP	BP	BP										

HD HD

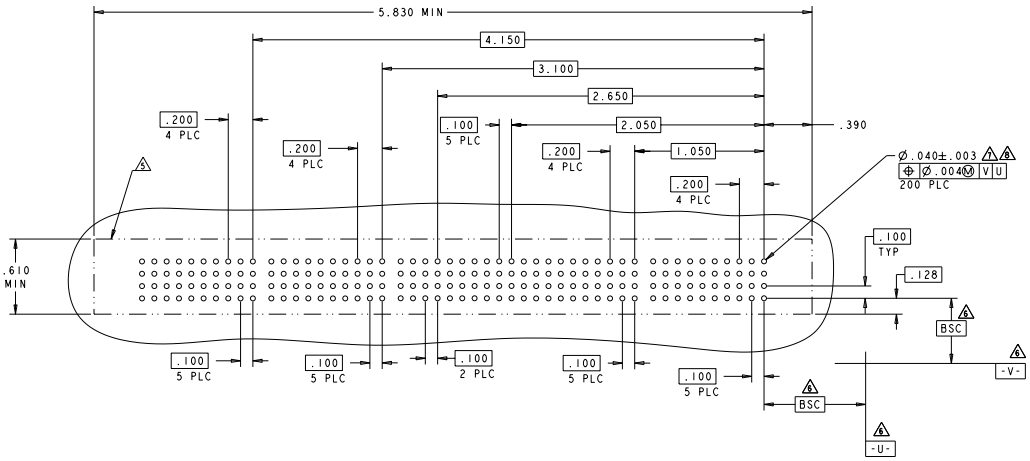

THIS DRAWING IS A CONFIDENTIAL DOCUMENT AND THE INFORMATION CONTAINED HEREIN MAY NOT BE DISCLOSED OR REPRODUCED WITHOUT THE PRIOR WRITTEN CONSENT OF TYCO ELECTRONICS CORPORATION.

DIMENSIONS: INCHES

TOLERANCES UNLESS OTHERWISE SPECIFIED:
0 PLC ±-
1 PLC ±-
2 PLC ±.01
3 PLC ±.005
4 PLC ±.0020
ANGLES ±2°

MATERIAL -
FINISH -

DRN B.GRZYBOWSKI 02MAY05
CHK W.PERCHERKE 02MAY05
APD W.PERCHERKE
PRODUCT SPEC 108-1973
APPLICATION SPEC 114-13038
WEIGHT -

Tyco Electronics Corporation
Shanghai,P.R.China,200233

NAME VERTICAL RECEPTACLE ASSEMBLY WITH GUIDES, MULTI-BEAM XL

SIZE A1 | CAGE CODE 00779 | DRAWING NO C-6450550 | RESTRICTED TO -

CUSTOMER DRAWING | SCALE 1:1 | SHEET 9 OF 19 | REV T4

AMP 4805 REV 31MAR2000

Downloaded from Elcodis.com electronic components distributor

THIS DRAWING IS UNPUBLISHED. RELEASED FOR PUBLICATION 20
© COPYRIGHT 20 BY TYCO ELECTRONICS CORPORATION. ALL RIGHTS RESERVED.

LOC	DIST
ES	00

REVISIONS

P	LTR	DESCRIPTION	DATE	DWN	APVD
	-	SEE SHEET 1	-	-	-

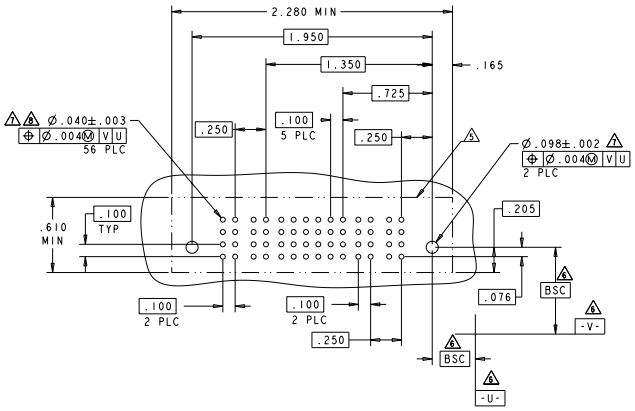

ASSY PART NUMBER	ROWS
5-6450550-0	D C B A
2P + 24S + 2P	

POWER		SIGNAL						POWER	
P4	P3	6	5	4	3	2	1	P2	P1
ST	PT	AT AT AT AT	AT AT AT AT	AT AT AT AT	AT AT AT AT	AT AT AT AT	AT AT AT AT	PT	ST

HD HD

PART NUMBER	ROWS
4-6450550-9	D C B A
14P + 24S + 12P	

POWER																																SIGNAL						POWER																	
P26	P25	P24	P23	P22	P21	P20	P19	P18	P17	P16	P15	6	5	4	3	2	1	P14	P13	P12	P11	P10	P9	P8	P7	P6	P5	P4	P3	P2	P1
GS	GS	GS	GS	GS	GS	GS	GS	GP	GP	GP	AP AP AP AP AP AP	AP AP AP AP AP AP	AP AP AP AP AP AP	AP AP AP AP AP AP	GP	GP	GP	GP	GP	GP	GP	GP	GS	GS	GS	GS	GS

.250 .250 .250 .250 .200 20 PLC

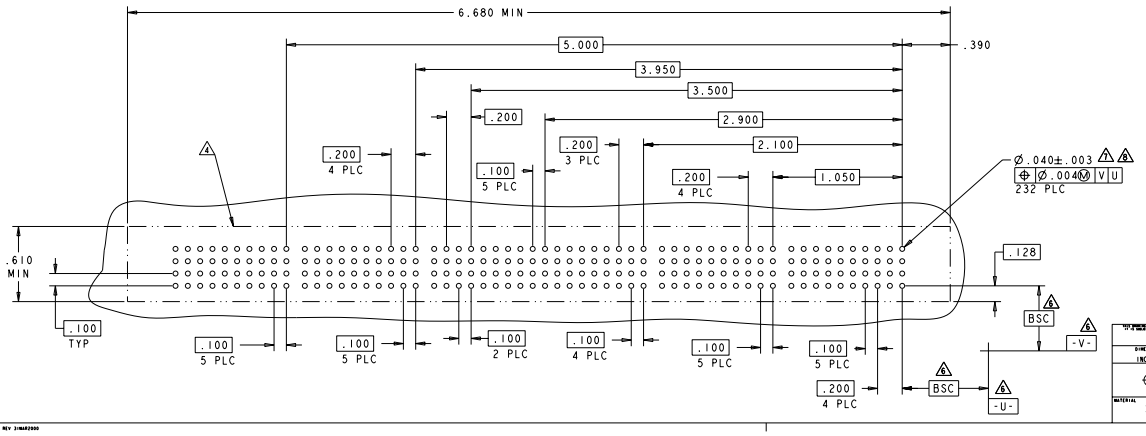

DRN	D.GRZYBOWSKI	02MAY05
CHK	W.PERCHERKE	02MAY05
APD	W.PERCHERKE	
PRODUCT SPEC	108-1973	
APPLICATION SPEC	114-13038	
WEIGHT	-	

DIMENSIONS: INCHES

TOLERANCES UNLESS OTHERWISE SPECIFIED:
0 PLC ±-
1 PLC ±-
2 PLC ±.01
3 PLC ±.005
4 PLC ±.0025
ANGLES ±2°

MATERIAL :
FINISH :

Tyco Electronics Corporation
Shanghai, P.R.China.200233

NAME: VERTICAL RECEPTACLE ASSEMBLY WITH GUIDES, MULTI-BEAM XL

SIZE	CAGE CODE	DRAWING NO	RESTRICTED TO
A1	00779	C-6450550	-

CUSTOMER DRAWING SCALE 1:1 SHEET 10 OF 10 REV T4

AMP 4805 REV 31MAR2000

Downloaded from Elcodis.com electronic components distributor

THIS DRAWING IS UNPUBLISHED. RELEASED FOR PUBLICATION 20
© COPYRIGHT 20 BY TYCO ELECTRONICS CORPORATION. ALL RIGHTS RESERVED.

LOC	DIST
ES	00

REVISIONS

P	LTR	DESCRIPTION	DATE	DWN	APVD
	-	SEE SHEET 1	-	-	-

PART NUMBER	ROWS
2-6450550-9	D C B A
4P + 40S + 4P	

POWER				SIGNAL												POWER			
P8	P7	P6	P5	10	9	8	7	6	5	4	3	2	1	P4	P3	P2	P1
GS	GS	GP	GS	AP	AP	AP	AP	AP	AP	AP	AP	AP	AP	GP	GP	GS	GS
				AP	AP	AP	AP	AP	AP	AP	AP	AP	AP				
				AP	AP	AP	AP	AP	AP	AP	AP	AP	AP				
				AP	AP	AP	AP	AP	AP	AP	AP	AP	AP				

HD HD

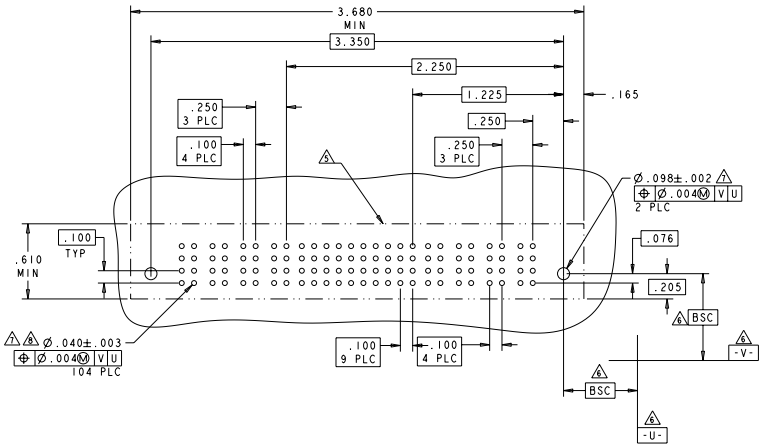

PART NUMBER	ROWS
5-6450550-4	D C B A
2P + 16S + 4P	

POWER				SIGNAL				POWER	
P6	P5	P4	P3	4	3	2	1	P2	P1
GS	GS	GP	GP	AP	AP	AP	AP	GP	GS
				AP	AP	AP	AP		
				AP	AP	AP	AP		
				AP	AP	AP	AP		

HD HD

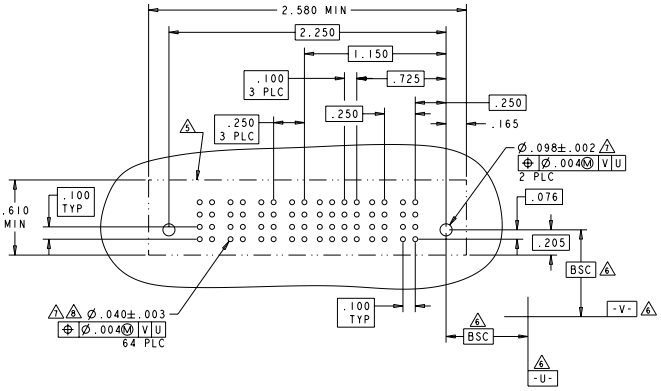

DRN R.GRZYBOWSKI 02MAY05	Tyco Electronics Corporation Shanghai, P.R.China.200233	
CHK W.PERCHERKE 02MAY05		
APD W.PERCHERKE	NAME VERTICAL RECEPTACLE ASSEMBLY WITH GUIDES, MULTI-BEAM XL	
PRODUCT SPEC 108-1973		
APPLICATION SPEC 114-13038	SIZE A1 / CAGE CODE 00779 / DRAWING NO C-6450550	RESTRICTED TO -
WEIGHT -	SCALE 1:1 / SHEET 11 OF 19	REV 4
CUSTOMER DRAWING		

DIMENSIONS: INCHES

TOLERANCES UNLESS OTHERWISE SPECIFIED:
0 PLC ±-
1 PLC ±-
2 PLC ±0.01
3 PLC ±0.005
4 PLC ±0.0025
ANGLES ±2°

MATERIAL -
FINISH -

AMP 4805 REV 31MAR2000

Downloaded from Elcodis.com electronic components distributor

THIS DRAWING IS UNPUBLISHED. RELEASED FOR PUBLICATION 20
© COPYRIGHT 20 BY TYCO ELECTRONICS CORPORATION. ALL RIGHTS RESERVED.

LOC	DIST
ES	00

REVISIONS

#	LTR	DESCRIPTION	DATE	DWN	APVD
	-	SEE SHEET 1	-	-	-

PART NUMBER	ROWS	POWER (L)					SIGNAL						POWER (R)		
		P8	P7	P6	P5	P4	6	5	4	3	2	1	P3	P2	P1
5-6450550-3	D C B A	GP	GP	GP	GS	GS	AP AP AP AP	AP AP AP AP	AP AP AP AP				GP	GS	GS
3ACP + 24S + 5P															

NO CONTACTS LOADED

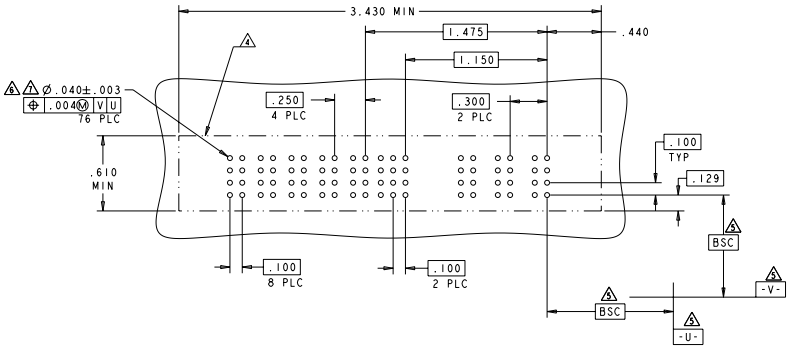

ASSY PART NUMBER	ROWS	POWER		SIGNAL						POWER	
		P4	P3	6	5	4	3	2	1	P2	P1
4-6450550-7	D C B A	GS	GP	AP AP AP AP	AP AP AP AP	AP AP AP AP	AP AP AP AP	AP AP AP AP	AP AP AP AP	GP	GS
2P + 24S + 2P		HD									HD

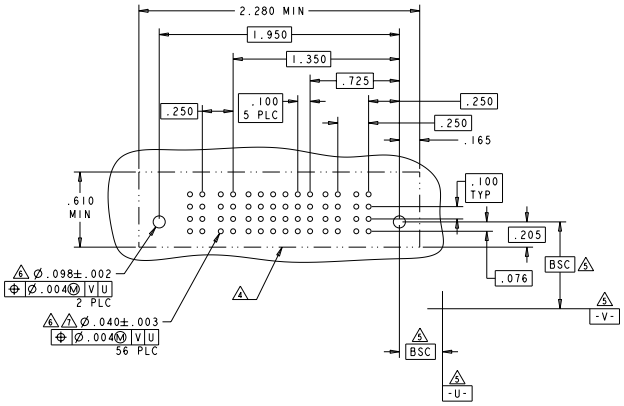

PART NUMBER	ROWS	POWER (L)					SIGNAL						POWER (R)			
		P9	P8	P7	P6	P5	6	5	4	3	2	1	P4	P3	P2	P1
5-6450550-5	D C B A	GS	GS	GS	GS	GS	AP AP AP AP	AP AP AP AP	AP AP AP AP	AP AP AP AP	AP AP AP AP		GS	GS	GS	GS
4P + 24S + 5P		HD														HD

NO CONTACTS LOADED

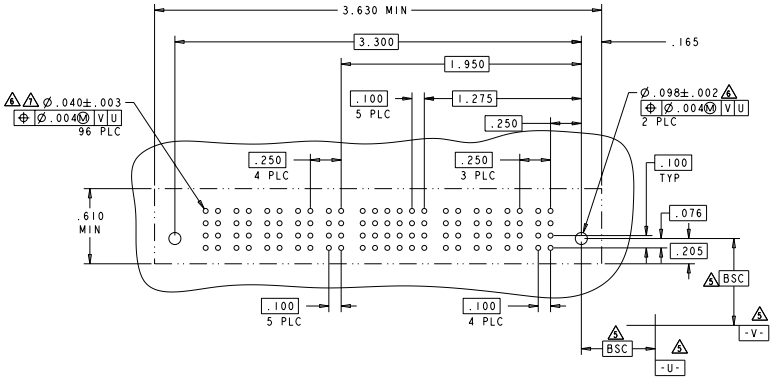

DWN R.GRZYBOWSKI 02MAY05	Tyco Electronics Corporation Shanghai, P.R.China.200233		
CHK W.PERCHERKE 02MAY05			
APD W.PERCHERKE	NAME VERTICAL RECEPTACLE ASSEMBLY WITH GUIDES, MULTI-BEAM XL		
PRODUCT SPEC 108-1973			
APPLICATION SPEC 114-13038	SIZE A1	CAGE CODE	DRAWING NO 00779 C-6450550
WEIGHT -	SCALE 1:1	SHEET 12 OF 19	REV T4
CUSTOMER DRAWING			

DIMENSIONS: INCHES
TOLERANCES UNLESS OTHERWISE SPECIFIED:
0 PLC ±-
1 PLC ±-
2 PLC ±.01
3 PLC ±.005
4 PLC ±.0020
ANGLES ±2°
FINISH -
MATERIAL -

NOTICE: THIS DRAWING IS A CONTROLLED DOCUMENT AND IS PROPRIETARY TO TYCO ELECTRONICS CORPORATION. UNAUTHORIZED USE OR DISCLOSURE IS PROHIBITED.

AMP 4805 REV 31MAR2000

Downloaded from Elcodis.com electronic components distributor

THIS DRAWING IS UNPUBLISHED. RELEASED FOR PUBLICATION 20
© COPYRIGHT 20 BY TYCO ELECTRONICS CORPORATION. ALL RIGHTS RESERVED.

LOC	DIST
ES	00

REVISIONS

#	LTR	DESCRIPTION	DATE	DWN	APVD
	-	SEE SHEET 1	-	-	-

PART NUMBER	ROWS
5-6450550-6	D C B A
3P + 24S + 3P	

POWER: P6 P5 P4 — SIGNAL: 6 5 4 3 2 1 — POWER: P3 P2 P1

GS GS — AP AP AP AP AP AP / AP AP AP AP AP AP / AP AP AP AP AP AP / AP AP AP AP AP AP — GP GS GS

HD HD

NO CONTACT LOADED

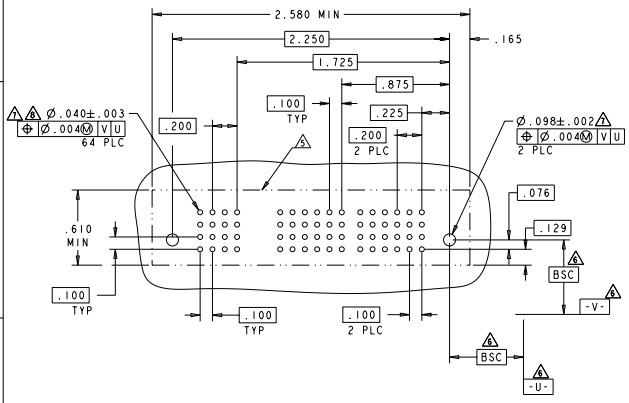

PART NUMBER	ROWS
5-6450550-7	D C B A
4P + 24S + 4P	

POWER (L): P8 P7 P6 P5 — SIGNAL: 6 5 4 3 2 1 — POWER (R): P4 P3 P2 P1

GP GS GP GS — AP AP AP AP AP AP / AP AP AP AP AP AP / AP AP AP AP AP AP / AP AP AP AP AP AP — GS GP GS GP

HD HD

K1 K1

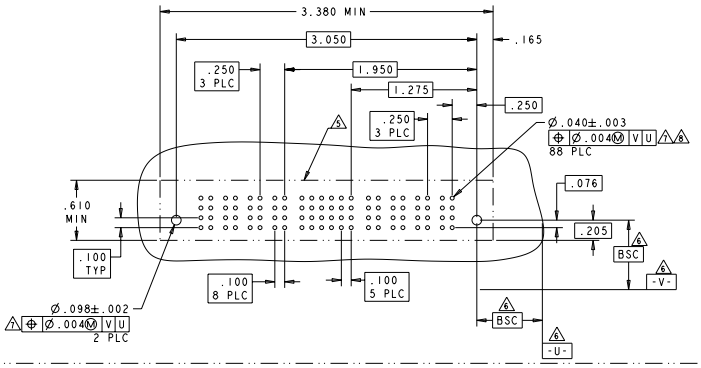

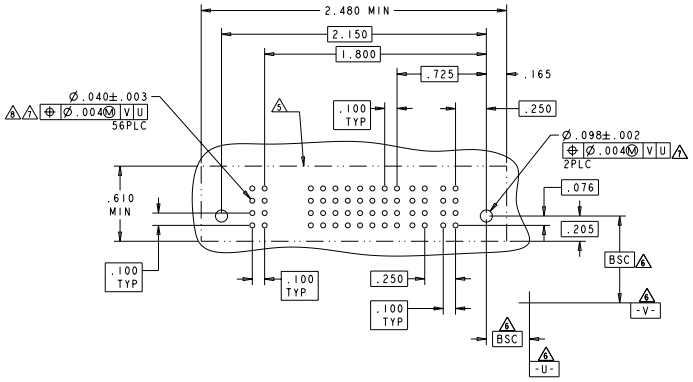

PART NUMBER	ROWS
5-6450550-8	D C B A
2P + 32S + 2P	

POWER (L): P4 P3 — SIGNAL: 8 7 6 5 4 3 2 1 — POWER (R): P2 P1

GS — AP AP AP AP AP AP AP AP / AP AP AP AP AP AP AP AP / AP AP AP AP AP AP AP AP / AP AP AP AP AP AP AP AP — GP GS

HD HD

NO CONTACT LOADED

DWN R.GRZYBOWSKI 02MAY05	Tyco Electronics Corporation Shanghai, P.R.China.200233	
CHK W.PERCHERKE 02MAY05		
APPD W.PERCHERKE	NAME VERTICAL RECEPTACLE ASSEMBLY WITH GUIDES, MULTI-BEAM XL	
PRODUCT SPEC 108-1973		
APPLICATION SPEC 114-13038	SIZE A1 / CAGE CODE 00779 / DRAWING NO C-6450550	RESTRICTED TO -
WEIGHT -	SCALE 1:1 / SHEET 13 OF 19	REV T4
CUSTOMER DRAWING		

DIMENSIONS: INCHES

TOLERANCES UNLESS OTHERWISE SPECIFIED: 0 PLC ±-; 1 PLC ±-; 2 PLC ±.01; 3 PLC ±.005; 4 PLC ±.0020; ANGLES ±30'

MATERIAL: -

FINISH: -

AMP 4805 REV 31MAR2000

Downloaded from Elcodis.com electronic components distributor

THIS DRAWING IS UNPUBLISHED. RELEASED FOR PUBLICATION 20
© COPYRIGHT 20 BY TYCO ELECTRONICS CORPORATION. ALL RIGHTS RESERVED.

LOC	DIST
ES	00

REVISIONS

P	LTR	DESCRIPTION	DATE	DWN	APVD
	-	SEE SHEET 1	-	-	-

PART NUMBER	ROWS	POWER					SIGNAL									POWER				
		P9	P8	P7	P6	P5	6	5	4	3	2	1	P5	P4	P3	P2	P1			
5-6450550-9	D C B A	GP	GP	GP	GP	GP	AP AP AP AP	AP AP AP AP	AP AP AP AP	AP AP AP AP	AP AP AP AP	AP AP AP AP		GP	GP	GP	GP	HD	HD	
4P + 24S + 5P																				

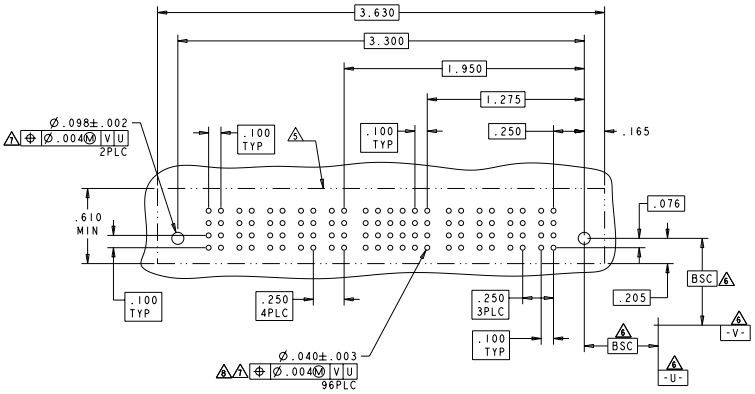

PART NUMBER	ROWS	POWER					SIGNAL									POWER				
		P9	P8	P7	P6		6	5	4	3	2	1	P5	P4	P3	P2	P1			
6-6450550-0	D C B A	GP	GP	GP	GP		AP AP AP AP	AP AP AP AP	AP AP AP AP	AP AP AP AP	AP AP AP AP	AP AP AP AP		GP	GP	GP	GP	HD	HD	
5P + 24S + 4P																				

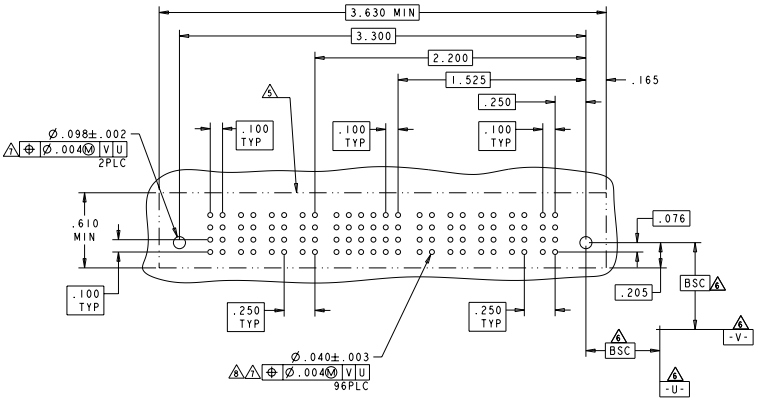

DIMENSIONS: INCHES	TOLERANCES UNLESS OTHERWISE SPECIFIED: 0 PLC ±: 1 PLC ±: 2 PLC ±: 3 PLC ±: ANGLES ±:	DWN R.GRZYBOWSKI 02MAY05 CHK W.PERCHERKE 02MAY05 APD W.PERCHERKE PRODUCT SPEC 108-1973 APPLICATION SPEC 114-13038 WEIGHT -
MATERIAL -	FINISH -	

Tyco Electronics Corporation
Shanghai, P.R.China.200233

NAME VERTICAL RECEPTACLE ASSEMBLY WITH GUIDES, MULTI-BEAM XL

SIZE	CAGE CODE	DRAWING NO	RESTRICTED TO
A1	00779	C-6450550	-

CUSTOMER DRAWING SCALE 1:1 SHEET 14 OF 19 REV 14

Downloaded from Elcodis.com electronic components distributor

THIS DRAWING IS UNPUBLISHED. RELEASED FOR PUBLICATION 20
© COPYRIGHT 20 BY TYCO ELECTRONICS CORPORATION. ALL RIGHTS RESERVED.

LOC	DIST
ES	00

REVISIONS

#	LTR	DESCRIPTION	DATE	DWN	APVD
	-	SEE SHEET 1	-	-	-

PART NUMBER	ROWS	POWER										SIGNAL						POWER								
		P18	P17	P16	P15	P14	P13	P12	P11	P10		1	2	3	4	5	6	P9	P8	P7	P6	P5	P4	P3	P2	P1
6-6450550-1	D		GS	GS	GP	GP	GP	GS	GS	GS	GS	AP	AP	AP	AP	AP	AP	GS	GS	GS	GS	GP	GP	GP	GS	GS
	C											AP	AP	AP	AP	AP	AP									
	B											AP	AP	AP	AP	AP	AP									
	A											AP	AP	AP	AP	AP	AP									
9P + 24S + 9P		HD																								HD

PART NUMBER	ROWS	POWER										SIGNAL						POWER								
		P18	P17	P16	P15	P14	P13	P12	P11	P10		1	2	3	4	5	6	P9	P8	P7	P6	P5	P4	P3	P2	P1
6-6450550-5	D		GP	GS	GS	GS	GS	GS	GS	GS	GS	AP	AP	AP	AP	AP	AP	GS	GS	GS	GS	GS	GS	GS	GS	GP
	C											AP	AP	AP	AP	AP	AP									
	B											AP	AP	AP	AP	AP	AP									
	A											AP	AP	AP	AP	AP	AP									
9P + 24S + 9P		HD																								HD

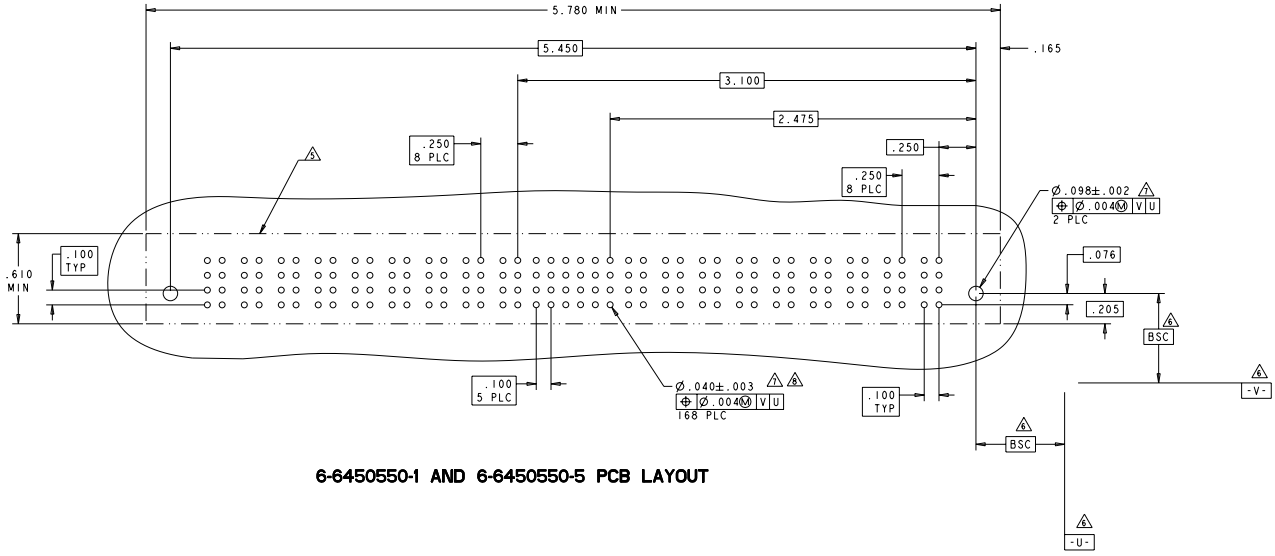

6-6450550-1 AND 6-6450550-5 PCB LAYOUT

DWN R.GRZYBOWSKI 02MAY05	Tyco Electronics Corporation Shanghai,P.R.China,200233	
CHK W.PERCHERKE 02MAY05		
APD W.PERCHERKE	NAME VERTICAL RECEPTACLE ASSEMBLY WITH GUIDES, MULTI-BEAM XL	
PRODUCT SPEC 108-1973		
APPLICATION SPEC 114-13038	SIZE A1 / CAGE CODE 00779 / DRAWING NO C-6450550	RESTRICTED TO -
WEIGHT -	SCALE 1:1 / SHEET 15 OF 19	REV T4
CUSTOMER DRAWING		

DIMENSIONS: INCHES

TOLERANCES UNLESS OTHERWISE SPECIFIED:
0 PLC ±-
1 PLC ±-
2 PLC ±.01
3 PLC ±.005
4 PLC ±.0020
ANGLES ±2°

MATERIAL -
FINISH -

Downloaded from Elcodis.com electronic components distributor

THIS DRAWING IS UNPUBLISHED. RELEASED FOR PUBLICATION 20
© COPYRIGHT 20 BY TYCO ELECTRONICS CORPORATION. ALL RIGHTS RESERVED.

LOC	DIST
ES	00

REVISIONS

P	LTR	DESCRIPTION	DATE	DWN	APVD
	-	SEE SHEET 1	-	-	-

PART NUMBER	ROWS	POWER								SIGNAL										POWER		
		P11	P10	P9	P8	P7	P6	P5	P4	10	9	8	7	6	5	4	3	2	1	P3	P2	P1
6-6450550-2	D	GS	GS	GS	GS	GP	GP	GP	GP	AP	AP	AP	AP	AP	AP	AP	AP	AP	AP	GS	GP	GS
	C									AP	AP	AP	AP	AP	AP	AP	AP	AP	AP			
	B									AP	AP	AP	AP	AP	AP	AP	AP	AP	AP			
	A									AP	AP	AP	AP	AP	DAP	AP	AP	AP	AP			
3P + 40S + 8P																						

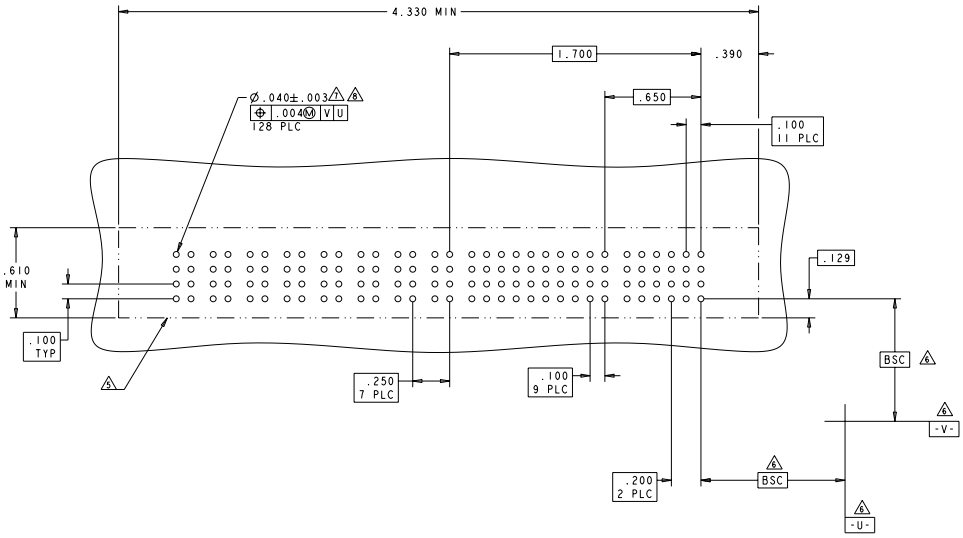

THE INFORMATION CONTAINED IN THIS DRAWING IS THE SOLE PROPERTY OF TYCO ELECTRONICS CORPORATION AND SHALL NOT BE REPRODUCED OR USED FOR ANY OTHER PURPOSE.

DIMENSIONS: INCHES

TOLERANCES UNLESS OTHERWISE SPECIFIED:
0 PLC ±-
1 PLC ±-
2 PLC ±.01
3 PLC ±.005
4 PLC ±.0020
ANGLES ±2°

MATERIAL -

FINISH -

DWN	02MAY05	R.GRZYBOWSKI
CHK	02MAY05	W.PERCHERKE
APD		W.PERCHERKE
PRODUCT SPEC		108-1973
APPLICATION SPEC		114-13038
WEIGHT		-

Tyco Electronics Corporation
Shanghai, P.R.China.200233

NAME: VERTICAL RECEPTACLE ASSEMBLY WITH GUIDES, MULTI-BEAM XL

SIZE	CAGE CODE	DRAWING NO	RESTRICTED TO
A1	00779	C-6450550	-

CUSTOMER DRAWING

SCALE 1:1 SHEET 16 OF 19 REV T4

AMP 4805 REV 31MAR2000

Downloaded from Elcodis.com electronic components distributor

THIS DRAWING IS UNPUBLISHED. RELEASED FOR PUBLICATION 20
© COPYRIGHT 20 BY TYCO ELECTRONICS CORPORATION. ALL RIGHTS RESERVED.

LOC	DIST
ES	00

REVISIONS

P	LTR	DESCRIPTION	DATE	DWN	APVD
	-	SEE SHEET 1	-	-	-

PART NUMBER	ROWS	POWER							SIGNAL						POWER						
		P14	P13	P12	P11	P10	P9	P8	1	2	3	4	5	6	P7	P6	P5	P4	P3	P2	P1
6-6450550-3	D C B A	GP	GP	GP	GS	GS	GS	GS	AP AP AP AP	AP AP AP AP	AP AP AP AP	AP AP AP AP	AP AP AP AP	AP AP AP AP	GS	GS	GS	GS	GP	GP	GP
7P + 24S + 7P		HD																			HD

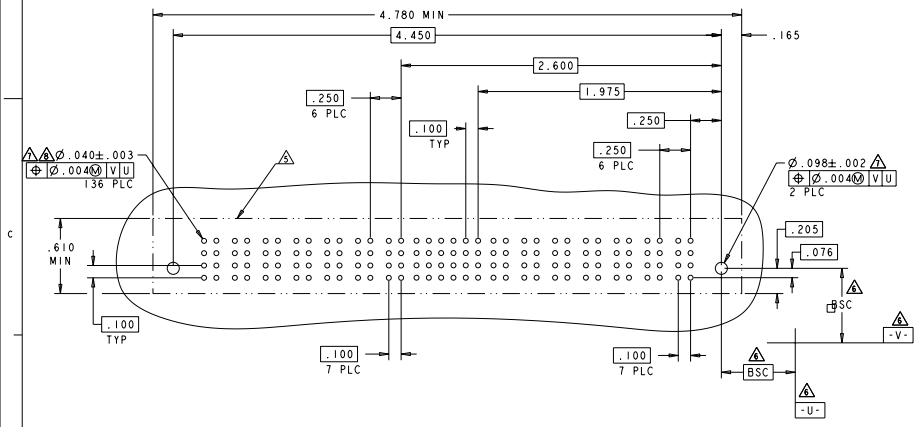

ASSY PART NUMBER	ROWS	POWER				SIGNAL				POWER	
		P6	P5	P4	P3	4	3	2	1	P2	P1
6-6450550-4	D C B A	GP	GP	GS	GS	AP AP AP AP	AP AP AP AP	AP AP AP AP	AP AP AP AP	GS	GP
2P + 16S + 4P		HD									HD

REMARK:

PCB LAYOUT THE SAME AS 5-6450550-4

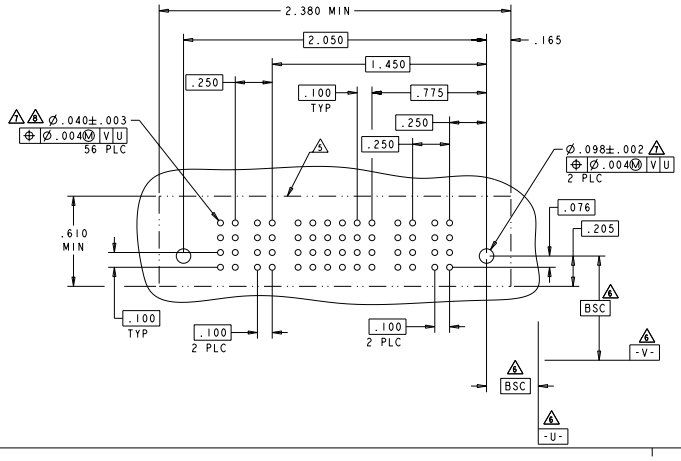

ASSY PART NUMBER	ROWS	POWER		SIGNAL						POWER	
		P4	P3	6	5	4	3	2	1	P2	P1
6-6450550-6	D C B A	GS	GP	AP AP AP AP	AP AP AP AP	AP AP AP AP	AP AP AP AP	AP AP AP AP	AP AP AP AP	GS	GP
2P + 24S + 2P		HD									HD

DIMENSIONS: INCHES	TOLERANCES UNLESS OTHERWISE SPECIFIED: 0 PLC ±- 1 PLC ±- 2 PLC ±.01 3 PLC ±.005 4 PLC ±.0020 ANGLES ±2°	MATERIAL - FINISH -	DWN R.GRZYBOWSKI 02MAY05 CHK W.PERCHERKE 02MAY05 APD W.PERCHERKE PRODUCT SPEC 108-1973 APPLICATION SPEC 114-13038 WEIGHT -

Tyco Electronics Corporation
Shanghai,P.R.China.200233

NAME VERTICAL RECEPTACLE ASSEMBLY WITH GUIDES, MULTI-BEAM XL

SIZE	CAGE CODE	DRAWING NO	RESTRICTED TO
A1	00779	C-6450550	-

CUSTOMER DRAWING SCALE 1:1 SHEET 17 OF 19 REV 14

AMP 4805 REV 31MAR2000

Downloaded from Elcodis.com electronic components distributor

THIS DRAWING IS UNPUBLISHED. RELEASED FOR PUBLICATION 20
© COPYRIGHT 20 BY TYCO ELECTRONICS CORPORATION. ALL RIGHTS RESERVED.

LOC	DIST
ES	00

REVISIONS

P	LTR	DESCRIPTION	DATE	DWN	APVD
	-	SEE SHEET 1	-	-	-

PART NUMBER	ROWS		POWER P6	POWER P5	POWER P4	SIGNAL 8	SIGNAL 7	SIGNAL 6	SIGNAL 5	SIGNAL 4	SIGNAL 3	SIGNAL 2	SIGNAL 1	POWER P3	POWER P2	POWER P1	
6-6450550-7	D		GS	GS	GS	AP	AP	AP	AP	AP	AP	AP	AP	GP	GP	GP	
	C					AP	AP	AP	AP	AP	AP	AP	AP				
	B					AP	AP	AP	AP	AP	AP	AP	AP				
	A	HD				AP	AP	AP	AP	AP	AP	AP	AP				HD

3P + 32S + 3P

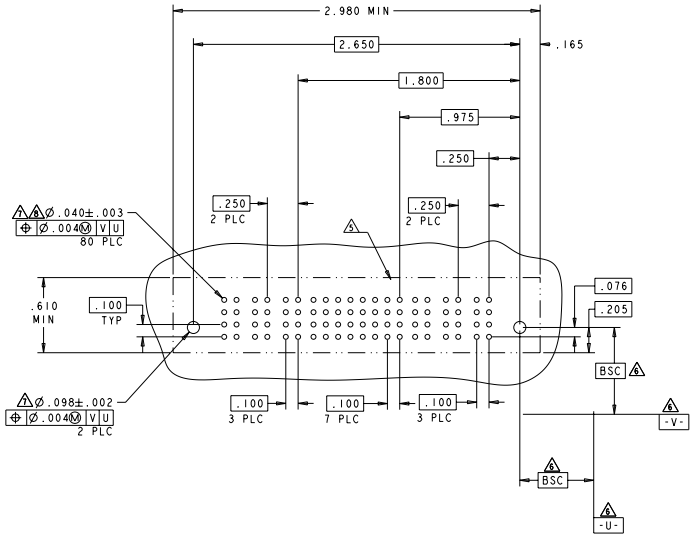

PART NUMBER	ROWS		POWER P6	POWER P5	POWER P4	SIGNAL 4	SIGNAL 3	SIGNAL 2	SIGNAL 1	POWER P3	POWER P2	POWER P1	
6-6450550-9	D		GP	GP	GP	AP	AP	AP	AP	GS	GS	GS	
	C					AP	AP	AP	AP				
	B					AP	AP	AP	AP				
	A	HD				AP	AP	AP	AP				HD

3P + 16S + 3P

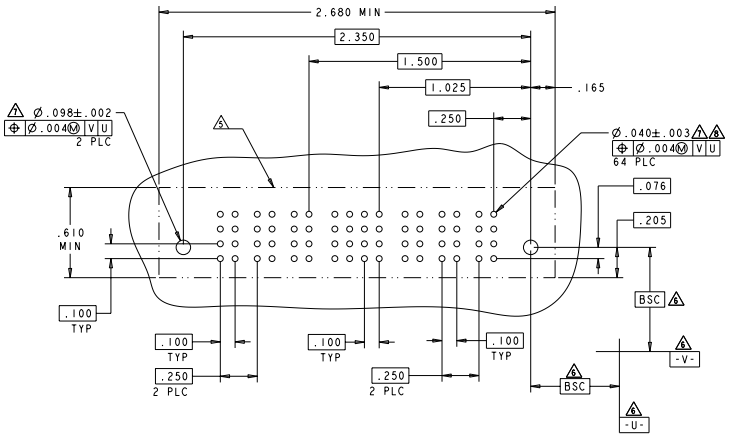

THIS DRAWING IS A CONFIDENTIAL DOCUMENT AND THE INFORMATION CONTAINED HEREIN IS NOT TO BE DISCLOSED OR REPRODUCED WITHOUT WRITTEN AUTHORITY FROM TYCO ELECTRONICS CORPORATION.

DRN	D.GRZYBOWSKI	02MAY05
CHK	W.PERCHERKE	02MAY05
APD	W.PERCHERKE	-
PRODUCT SPEC	108-1973	
APPLICATION SPEC	114-13038	
WEIGHT	-	

DIMENSIONS: INCHES

TOLERANCES UNLESS OTHERWISE SPECIFIED:
0 PLC ±-
1 PLC ±-
2 PLC ±.01
3 PLC ±.005
4 PLC ±.0020
ANGLES ±2°

MATERIAL -
FINISH -

Tyco Electronics Corporation
Shanghai, P.R.China.200233

NAME: VERTICAL RECEPTACLE ASSEMBLY WITH GUIDES, MULTI-BEAM XL

SIZE	CAGE CODE	DRAWING NO	RESTRICTED TO
A1	00779	C-6450550	-

CUSTOMER DRAWING SCALE 1:1 SHEET 18 OF 19 REV 4

AMP 4805 REV 31MAR2000

Downloaded from Elcodis.com electronic components distributor

THIS DRAWING IS UNPUBLISHED. RELEASED FOR PUBLICATION 20
© COPYRIGHT 20 BY TYCO ELECTRONICS CORPORATION. ALL RIGHTS RESERVED.

LOC	DIST
ES	00

REVISIONS

P	LTR	DESCRIPTION	DATE	DWN	APVD
	-	SEE SHEET 1	-	-	-

PART NUMBER	ROWS	POWER			SIGNAL						POWER			
		P7	P6	P5	6	5	4	3	2	1	P4	P3	P2	P1
1-6450550-4	D C B A	VS	VS	VP	P P P P	P P P P	P P P P	P P P P	P P P P	P P P P	VS	VS	VS	VS
4P + 24S + 3ACP		HD												HD

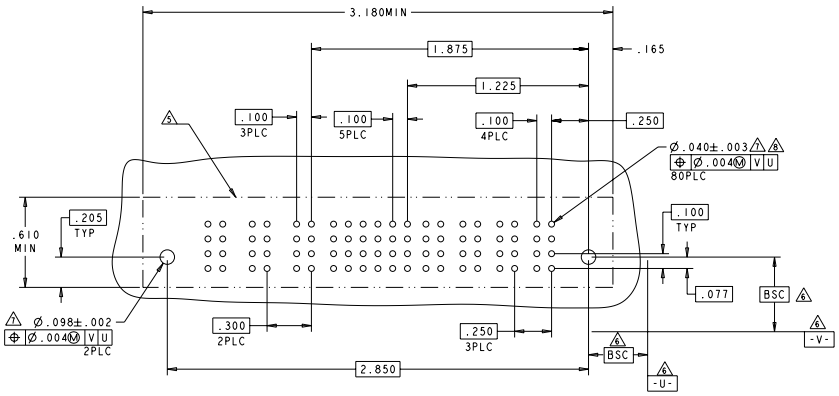

DIMENSIONS: INCHES	TOLERANCES UNLESS OTHERWISE SPECIFIED: 0 PLC ±: 1 PLC ±: 2 PLC ±.01 3 PLC ±.005 4 PLC ±.0020 ANGLES ±2°	DRN D2MATOS CHK D2MATOS APD W PERCHERKE APD W PERCHERKE PRODUCT SPEC 108-1973 APPLICATION SPEC 114-13038 WEIGHT -	Tyco Electronics Corporation Shanghai, P.R.China.200233
MATERIAL -	FINISH -		NAME VERTICAL RECEPTACLE ASSEMBLY WITH GUIDES, MULTI-BEAM XL
			SIZE A1 CAGE CODE 00779 DRAWING NO C-6450550 RESTRICTED TO -
		CUSTOMER DRAWING	SCALE 1:1 SHEET 19 OF 19 REV T4

AMP 4805 REV 31MAR2000

Downloaded from Elcodis.com electronic components distributor