THIS DRAWING IS UNPUBLISHED. RELEASED FOR PUBLICATION 20
© COPYRIGHT 20 BY TYCO ELECTRONICS CORPORATION. ALL RIGHTS RESERVED.

LOC ES DIST 00

REVISIONS

P	LTR	DESCRIPTION	DATE	DRN	APVD
	L2	REV PER ECR-10-010293	13MAR2010	IL	SY
	L3	REV PER ECR-10-012886	08JUN2010	AL	SY
	L4	REV PER ECR-10-020094	14OCT2010	AY	JHC

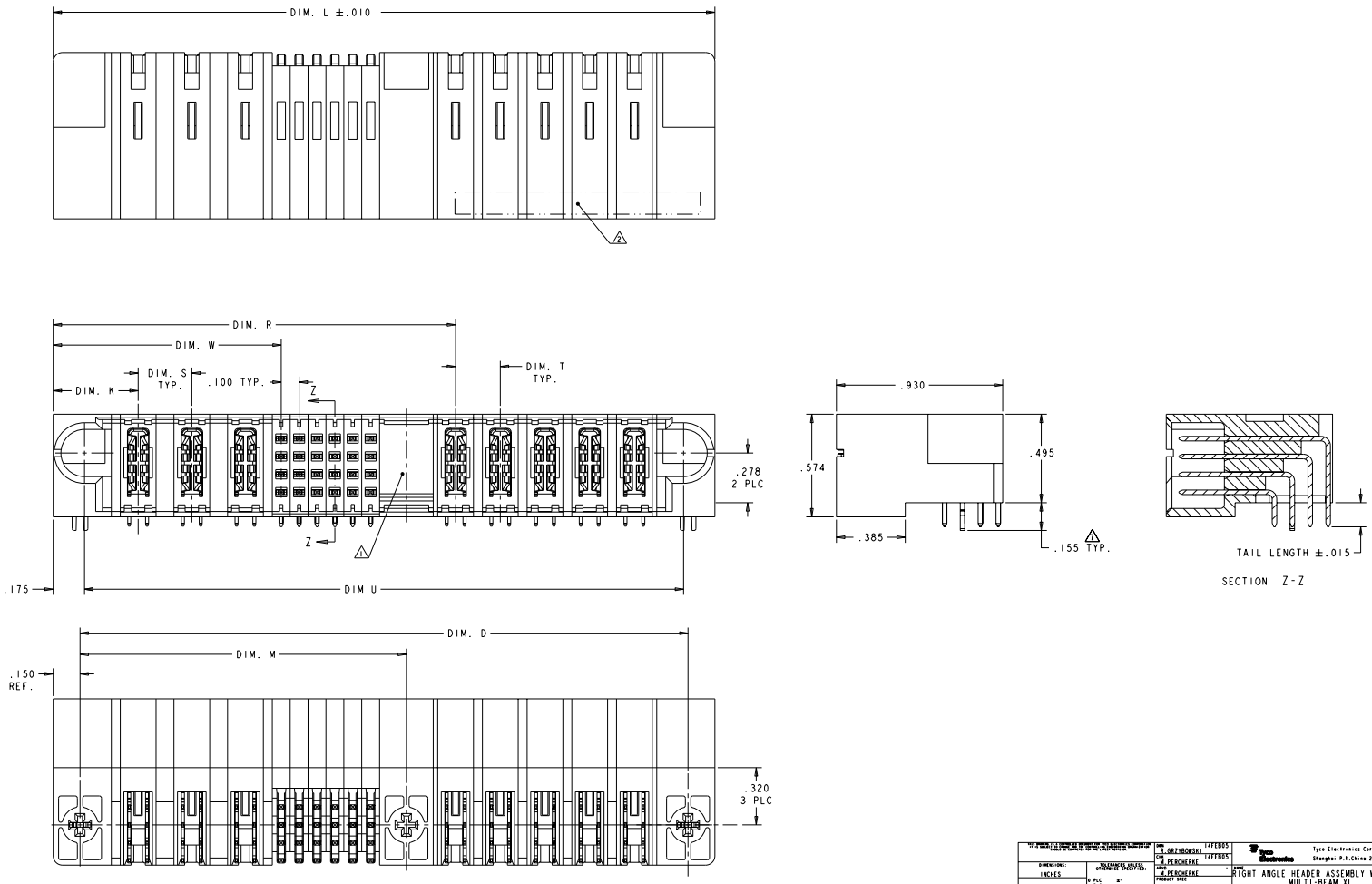

DRN R.GRZYBOWSKI 14FEB05	Tyco Electronics Corporation Shanghai P.R.China 200233	
CHK W.PERCHERKE 14FEB05		
APVD W.PERCHERKE	NAME RIGHT ANGLE HEADER ASSEMBLY W/GUIDES MULTI-BEAM XL	
PRODUCT SPEC 108-1973		
APPLICATION SPEC 114-13038	SIZE A1 / CAGE CODE 00779 / DRAWING NO C-6450130	RESTRICTED TO -
WEIGHT -	SCALE 1:1 / SHEET 1 OF 24	REV L4
CUSTOMER DRAWING		

DIMENSIONS: INCHES

TOLERANCES UNLESS OTHERWISE SPECIFIED:
0 PLC ±-
1 PLC ±-
2 PLC ±.01
3 PLC ±.005
4 PLC ±.0020
ANGLES ±2°

MATERIAL : 3
FINISH 4

AMP 4005 REV 31MAR2000
Pro/ENGINEER DRAWING

Downloaded from Elcodis.com electronic components distributor

THIS DRAWING IS UNPUBLISHED. RELEASED FOR PUBLICATION 20
© COPYRIGHT 20 BY TYCO ELECTRONICS CORPORATION. ALL RIGHTS RESERVED.

LOC	DIST
ES	00

REVISIONS

P	LTR	DESCRIPTION	DATE	DRN	APVD
	-	SEE SHEET 1	-	-	-

1. OPTIONAL CENTER MODULE WITH Ø.150 THRU HOLE OR HOLD DOWN FEATURE.
2. "AMP", PART NUMBER, AND DATE CODE TO BE MARKED IN AREA SHOWN.
3. MATERIAL: HOUSING - GLASS FILLED HIGH TEMP THERMO PLASTIC, UL94 V-0
   SIGNAL CONTACT - COPPER ALLOY
   POWER CONTACT - HIGH CONDUCTIVITY COPPER ALLOY
4. CONTACT PLATING: SIGNAL CONTACTS - .000050 MIN Ni UNDER ALL.
   .000030 MIN Au ON CONTACT AREA.
   .000100 MIN Sn AT PCB INTERFACE.
   POWER CONTACTS - .000050 MIN NI UNDER ALL.
   .000030 MIN Au ON CONTACT AREA.
   .000100 MIN Sn AT PCB INTERFACE.
5. MECHANICAL CONNECTOR KEEP OUT ZONE.
6. DATUM AND BASIC DIMENSIONS ESTABLISHED BY CUSTOMER.
7. HOLD DOWN SEATING DEPTH DIMENSION FOR 6450130-4 IS .185 TYP
8. PCB - ALL HOLE DIAMETERS ARE FINISHED HOLE SIZES.
9. PCB - .0453 +/-.0010 DRILLED HOLES PLATES WITH .0003 MIN Sn OVER .001 TO .003 Cu PLATING TO ACHIEVE A .040±.003 DIA HOLE.
10. VARIABLE DIMS. SHOWN ON VIEW

	DIM U	DIM S (1)	DIM T (2)	DIM R	DIM W	DIM D	DIM M	DIM L (4)	DIM K	DESCRIPTION	PART NUMBER
	1.300	-	-	1.200	.625	1.350	-	1.650	.450	1P + 20S + 1P	9-6450130-6
L3	2.300	.250	.300	1.575	.875	2.350	-	2.650	.450	2P + 24S + 3ACP	9-6450130-5
K6	2.800	.250	.300	2.075	1.375	2.850	-	3.150	.450	4P + 24S + 3ACP	9-6450130-4
	1.700	.250	.250	1.350	.875	1.750	-	2.050	.450	2P + 16S + 2P	9-6450130-3
	2.350	.250	.250	1.250	.875	2.400	-	2.700	.450	2P + 12S + 5P	9-6450130-2
	2.400	.250	.250	1.800	1.125	2.450	-	2.750	.450	3P + 24S + 3P	9-6450130-0
	1.200	-	-	1.100	.625	1.250	-	1.550	.450	1P + 16S + 1P	8-6450130-9
	1.900	.250	.250	1.550	.875	1.950	-	2.250	.450	2P + 24S + 2P	8-6450130-8
	2.900	.250	.250	2.550	.875	2.950	-	3.250	.450	2P + 64S + 2P	8-6450130-7
	2.400	.250	.250	1.800	1.125	2.450	-	2.750	.450	3P + 24S + 3P	8-6450130-6
	1.300	-	-	1.200	.675	1.350	-	1.650	.450	1P + 16S + 1P	8-6450130-5
	2.800	.250	.250	1.700	1.125	2.850	-	3.150	.450	3P + 20S + 5P	8-6450130-4
	2.800	.250	.300	2.075	1.375	2.850	-	3.150	.450	4P + 24S + 3ACP	8-6450130-2
	2.850	.250	.250	2.500	1.875	2.900	-	3.200	.450	6P + 20S + 2P	8-6450130-0
	2.600	.250	.250	2.250	1.625	2.650	-	2.950	.450	5P + 20S + 2P	7-6450130-9
	2.400	.250	.250	1.800	1.125	2.450	-	2.750	.450	3P + 24S + 3P	7-6450130-8
	4.800	.250	.250	3.450	1.875	4.850	-	5.150	.450	6P + 60S + 6P	7-6450130-7
	3.050	.300	.250	1.950	1.275	3.100	-	3.400	.475	3ACP + 24S + 5P	7-6450130-6
	2.400	.250	.250	1.800	1.125	2.450	-	2.750	.450	3P + 24S + 3P	7-6450130-5
	6.250	.250	(10)	5.050	4.375	6.300	-	6.600	.450	16P + 24S + 2P + 3ACP	7-6450130-4
L4	2.500	.250	.250	2.150	.875	2.550	-	2.850	.450	2P + 48S + 2P	6-6450130-9
	1.900	.250	.250	1.550	.875	1.950	-	2.250	.450	2P + 24S + 2P	6-6450130-7
	2.500	.250	.250	2.150	1.425	2.550	-	2.850	.450	4P + 24S + 2P	5-6450130-8
L2	6.330	(10)	(10)	3.925	3.275	6.350	-	6.650	.425	14P + 24S + 12P	5-6450130-6
	3.100	.200	.200	2.225	1.375	3.150	-	3.450	.425	5P + 32S + 5P	5-6450130-5
	2.300	.300	.250	1.950	1.275	2.350	-	2.650	.450	3ACP + 24S + 2P	5-6450130-1
	4.000	.300	.300	2.675	1.925	4.050	-	4.350	.475	5ACP + 24S + 5ACP	5-6450130-0
	3.000	.250	.250	2.150	1.425	3.050	-	3.350	.450	4P + 24S + 4P	4-6450130-9
	3.300	.250	.250	2.450	1.375	3.350	-	3.650	.450	4P + 40S + 4P	4-6450130-8
	3.100	.200	.200	2.225	1.375	3.150	-	3.450	.425	5P + 32S + 5P	4-6450130-5
	2.100	.300	.250	1.750	1.275	2.150	-	2.450	.475	3ACP + 16S + 2P	4-6450130-3
	1.900	.250	.250	1.550	.875	1.950	-	2.250	.450	2P + 24S + 2P	4-6450130-2
	2.100	.200	.200	1.425	1.175	2.150	-	2.450	.425	4P + 8S + 4P	4-6450130-0
	2.100	.300	.250	1.750	1.275	2.150	-	2.450	.475	3ACP + 16S + 2P	3-6450130-9
	4.675	.250	.300	3.950	3.375	4.725	-	5.025	.450	12P + 20S + 3ACP	3-6450130-6
	3.500	.250	.250	2.900	1.625	3.550	-	3.850	.450	5P + 48S + 3P	3-6450130-2
	1.900	.250	.250	1.550	.875	1.950	-	2.250	.450	2P + 24S + 2P	2-6450130-9
	3.250	.250	.250	2.900	1.125	3.300	-	3.600	.450	3P + 68S + 2P	2-6450130-8
L1	2.300	.300	.250	1.950	1.275	2.350	-	2.650	.475	3ACP + 24S + 2P	2-6450130-6
	2.600	.200	.200	1.925	1.175	2.650	-	2.950	.425	4HDP + 28S + 4HDP	2-6450130-4
	3.200	.200	.200	2.125	1.575	3.250	-	3.550	.425	6P + 20S + 6P	2-6450130-3
	2.800	.250	.300	2.075	1.375	2.850	-	3.150	.450	4P + 24S + 3ACP	2-6450130-2
	3.500	.200	.200	2.225	1.775	3.550	-	3.850	.425	7P + 16S + 7P	2-6450130-1
	5.450	(10)	(10)	3.075	2.425	5.500	-	5.800	.425	10P + 24S + 12P	2-6450130-0
	4.400	.250	.250	4.050	.875	4.450	-	4.750	.450	2P + 124S +2P	1-6450130-9
	4.275	(10)	.250	3.175	2.500	4.325	-	4.625	.475	2ACP + 6P + 24S + 5P	1-6450130-8
	1.900	.250	.250	1.550	.875	1.950	-	2.250	.450	2P + 24S + 2P	1-6450130-7
	3.300	.300	.250	1.950	1.275	3.350	-	3.650	.475	3ACP + 24S + 6P	1-6450130-4
	4.050	.250	-	3.950	.875	4.100	-	4.400	.450	2P + 120S + 1P	1-6450130-3
	3.250	.250	-	3.150	.875	3.300	-	3.600	.450	2P + 88S + 1P	1-6450130-2
	1.400	-	-	1.300	.625	1.450	-	1.750	.450	1P + 24S + 1P	1-6450130-1
	2.900	.250	.250	2.550	.875	2.950	-	3.250	.450	2P + 64S + 2P	1-6450130-0
	2.550	.250	.300	1.825	1.125	2.600	-	2.900	.450	3P + 24S + 3ACP	6450130-9
	2.675	.200	.200	2.375	1.650	2.725	-	3.025	.450	5P + 24S + 2P	6450130-8
	3.650	.250	.250	2.550	1.875	3.700	-	4.000	.450	6P + 24S + 5P	6450130-7
	2.400	.250	.250	1.800	1.125	2.450	-	2.750	.450	3P + 24S + 3P	6450130-6
	4.350	.250	.250	3.500	2.625	4.400	-	4.700	.450	9P + 32S + 4P	6450130-5
	2.800	.250	.300	2.075	1.375	2.850	-	3.150	.450	4P + 24S + 3ACP	6450130-4
	3.050	.300	.250	1.950	1.275	3.100	-	3.400	.475	3ACP + 24S + 5P	6450130-3
	2.550	.300	.250	2.200	1.525	2.600	-	2.900	.475	3ACP + 1P + 24S + 2P	6450130-2
	3.650	.300	.250	2.550	1.275	3.700	-	4.000	.475	3ACP + 48S + 5P	6450130-1

DIM U	DIM S (1)	DIM T (2)	DIM R	DIM W	DIM D	DIM M	DIM L (4)	DIM K	DESCRIPTION	PART NUMBER

THIS DRAWING IS A CONVERSION FROM THE PREVIOUS ORIGINAL DRAWING AND MAY NOT REFLECT CURRENT ENGINEERING STANDARDS. CHECK WITH SUPPLIER FOR THE LATEST VERSION

DIMENSIONS: INCHES

TOLERANCES UNLESS OTHERWISE SPECIFIED:
0 PLC ±:
1 PLC ±:
2 PLC ±: 0.01
3 PLC ±: 0.005
4 PLC ±: 0.0025
ANGLES ±:°
FINISH :

MATERIAL :

DWN R.GRZYBOWSKI 14FEB05
CHK 14FEB05
APD W.PERCHERKE
APR W.PERCHERKE
PRODUCT SPEC 108-1973
APPLICATION SPEC 114-13038
WEIGHT -

Tyco Electronics Corporation
Shanghai P.R.China 200233

NAME RIGHT ANGLE HEADER ASSEMBLY W/GUIDES MULTI-BEAM XL

SIZE A1 | CAGE CODE 00779 | DRAWING NO C-6450130 | RESTRICTED TO -

CUSTOMER DRAWING | SCALE 1:1 | SHEET 2 OF 24 | REV L4

AMP 4805 REV 31MAR2000

Downloaded from Elcodis.com electronic components distributor

THIS DRAWING IS UNPUBLISHED. RELEASED FOR PUBLICATION 20
© COPYRIGHT 20 BY TYCO ELECTRONICS CORPORATION. ALL RIGHTS RESERVED.

LOC	DIST
ES	00

REVISIONS

#	LTR	DESCRIPTION	DATE	DRN	APVD
	-	SEE SHEET 1	-	-	-

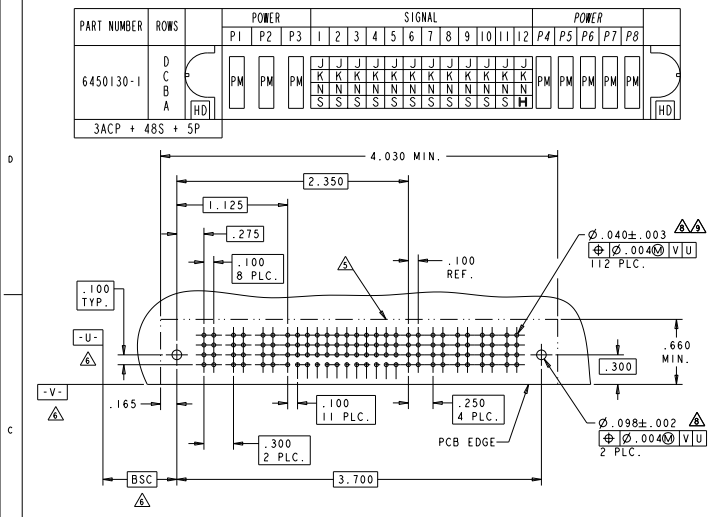

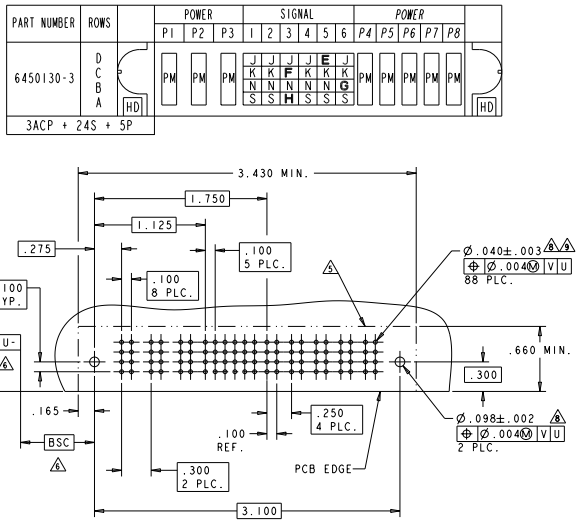

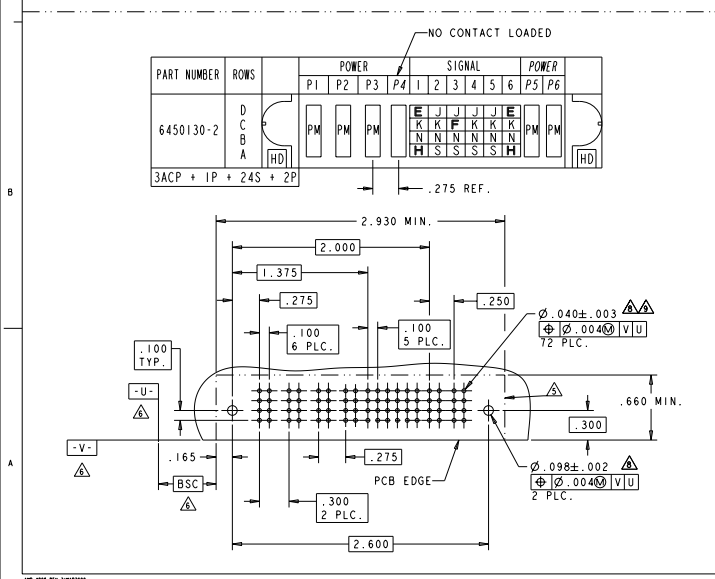

PM	.135	MULTI-BEAM
PA	.090	MULTI-BEAM
CODE	TAIL LENGTH	DESCRIPTION
POWER CONTACT		

Z	STD	.090	D
Y	STD	.090	C
R	STD	.090	B
O	STD	.090	A
A4	MLBF	.090	D
A3	MLBF	.090	C
A2	MLBF	.090	B
A1	MLBF	.090	A
E	MLBF	.135	D
F	MLBF	.135	C
G	MLBF	.135	B
H	MLBF	.135	A
J	STD	.135	D
K	STD	.135	C
N	STD	.135	B
S	STD	.135	A
CODE	MATING SEQUENCE	TAIL LENGTH	ROW
SIGNAL CONTACT			

THIS DRAWING IS A CONFIDENTIAL DOCUMENT AND THE INFORMATION CONTAINED HEREIN IS NOT TO BE DISCLOSED OR REPRODUCED WITHOUT WRITTEN AUTHORIZATION FROM TYCO ELECTRONICS CORPORATION.

DIMENSIONS: INCHES

TOLERANCES UNLESS OTHERWISE SPECIFIED:
0 PLC ±:
1 PLC ±:
2 PLC ±: 0.01
3 PLC ±: 0.005
4 PLC ±: 0.0020
ANGLES ±: 30'

MATERIAL :
FINISH :

DRN R.GRZYBOWSKI 14FEB05
CHK M.PERCHERKE 14FEB05
APD M.PERCHERKE
PRODUCT SPEC 108-1973
APPLICATION SPEC 114-13038
WEIGHT -

Tyco Electronics
Tyco Electronics Corporation
Shanghai P.R.China 200233

NAME RIGHT ANGLE HEADER ASSEMBLY W/GUIDES MULTI-BEAM XL

SIZE	CAGE CODE	DRAWING NO	RESTRICTED TO
A1	00779	C-6450130	-

CUSTOMER DRAWING SCALE 1:1 SHEET 3 OF 24 REV L4

AMP 4805 REV 31MAR2000

Downloaded from Elcodis.com electronic components distributor

THIS DRAWING IS UNPUBLISHED. RELEASED FOR PUBLICATION 20
© COPYRIGHT 20 BY TYCO ELECTRONICS CORPORATION. ALL RIGHTS RESERVED.

LOC	DIST
ES	00

REVISIONS

#	LTR	DESCRIPTION	DATE	DRN	APVD
	-	SEE SHEET 1	-	-	-

PART NUMBER	ROWS	POWER				SIGNAL						POWER		
		P1	P2	P3	P4	1	2	3	4	5	6	P5	P6	P7
6450130-4	D C B A	PM	PM	PM	PM	J K N S	J K N S	J K N S	J K N S	J K N S	J K N H	PM	PM	PM

4P + 24S + 3ACP

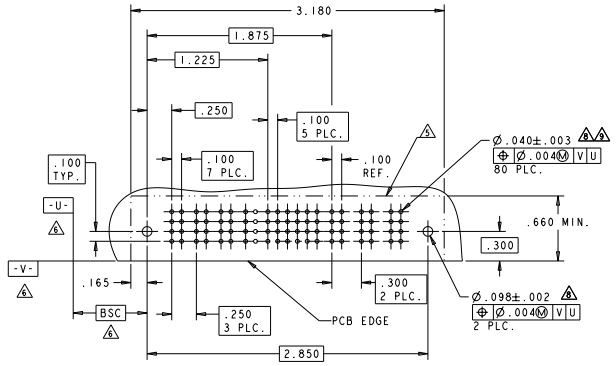

PART NUMBER	ROWS	POWER			SIGNAL						POWER		
		P1	P2	P3	1	2	3	4	5	6	P4	P5	P6
6450130-6	D C B A	PM	PM	PM	J K N S	J K N S	J K G S	J K N S	J K N S	J K N S	PM	PM	PM

3P + 24S + 3P

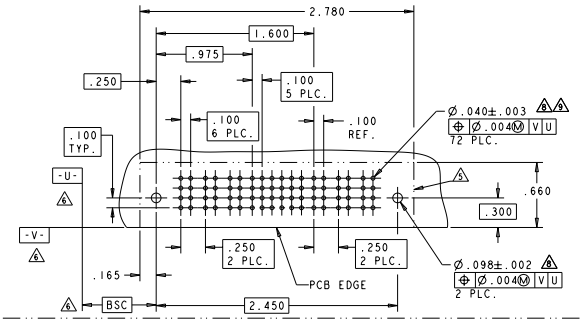

NO CONTACT LOADED

PART NUMBER	ROWS	POWER									SIGNAL								POWER			
		P1	P2	P3	P4	P5	P6	P7	P8	P9	1	2	3	4	5	6	7	8	P10	P11	P12	P13
6450130-5	D C B A	PM	PM		PM	PM	PM	PM	PM	PM	J K N S	J K N S	J K N S	J K N S	J K N S	E K N S	E K N S	E K N S	PM	PM	PM	PM

9P + 32S + 4P

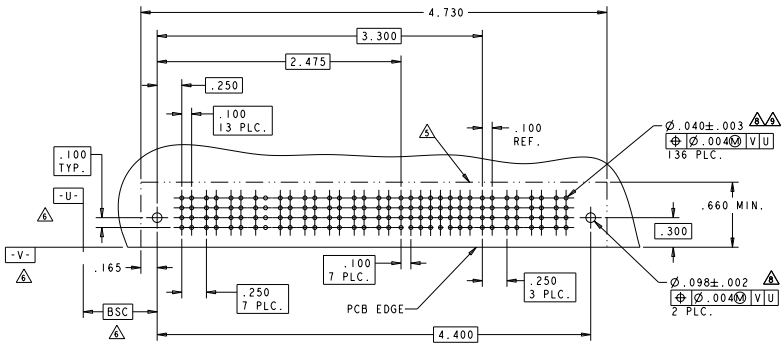

PART NUMBER	ROWS	POWER						SIGNAL						POWER				
		P1	P2	P3	P4	P5	P6	1	2	3	4	5	6	P7	P8	P9	P10	P11
6450130-7	D C B A	PM	PM	PM	PM	PM	PM	J K N S	J K N S	J K F N S H	J K N S	E J K N S G	J K N S	PM	PM	PM	PM	PM

6P + 24S + 5P

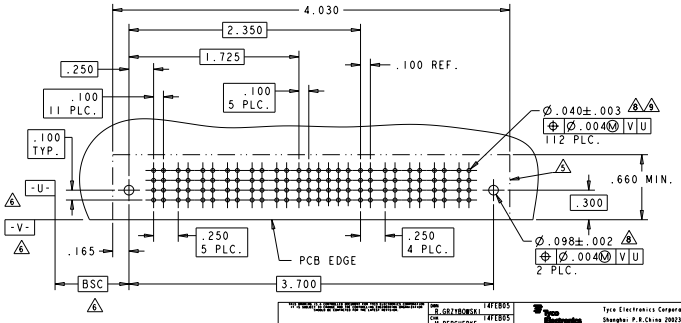

DRN R.GRZYBOWSKI 14FEB05			Tyco Electronics Corporation Shanghai P.R.China 200233
CHK W.PERCHERKE 14FEB05			
APPD W.PERCHERKE			RIGHT ANGLE HEADER ASSEMBLY W/GUIDES MULTI-BEAM XL
PRODUCT SPEC 108-1973			
APPLICATION SPEC 114-13038			
WEIGHT -			
SIZE A	CAGE CODE 00779	DRAWING NO C-6450130	RESTRICTED TO -
CUSTOMER DRAWING		SCALE 1:1	SHEET 4 OF 24 REV L4

DIMENSIONS: INCHES

TOLERANCES UNLESS OTHERWISE SPECIFIED:
0 PLC ±-
1 PLC ±-
2 PLC ±0.01
3 PLC ±0.005
4 PLC ±0.0025
ANGLES ±0°
FINISH -

MATERIAL -

AMP 4805 REV 31MAR2000

Downloaded from Elcodis.com electronic components distributor

THIS DRAWING IS UNPUBLISHED. RELEASED FOR PUBLICATION 20
© COPYRIGHT 20 BY TYCO ELECTRONICS CORPORATION. ALL RIGHTS RESERVED.

LOC	DIST
ES	00

REVISIONS

#	LTR	DESCRIPTION	DATE	DRN	APVD
	-	SEE SHEET 1	-	-	-

PART NUMBER	ROWS	POWER					SIGNAL						POWER	
		P1	P2	P3	P4	P5	1	2	3	4	5	6	P6	P7
6450130-8	D C B A	PM	PM	PM	PM		J K N S	J K N S	J K N S	J K N S	J K N G S	J K N S	PM	PM

5P + 24S + 2P

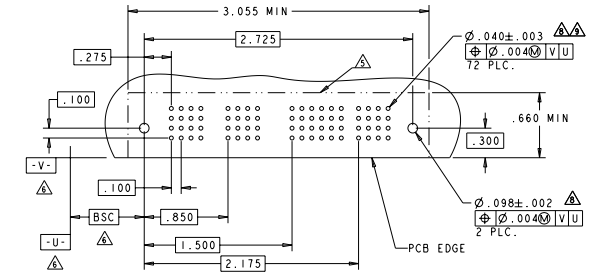

PART NUMBER	ROWS	POWER		SIGNAL																						POWER	
		P1	P2	P3	1	2	3	4	5	6	7	8	9	10	11	12	13	14	15	16						P3	P4
1-6450130-0	D C B A	PA	PA		A3 A2 A1	A3 A2 A1	A3 A2 A1	A3 A2 A1	A3 A2 A1	A3 A2 A1	A3 A2 A1	A3 A2 A1	A3 A2 A1	A3 A2 A1	A3 A2 A1	A3 A2 A1	A3 A2 A1	A3 A2 A1	A3 A2 O	A3 A2 O						PA	PA

2P + 64S + 2P

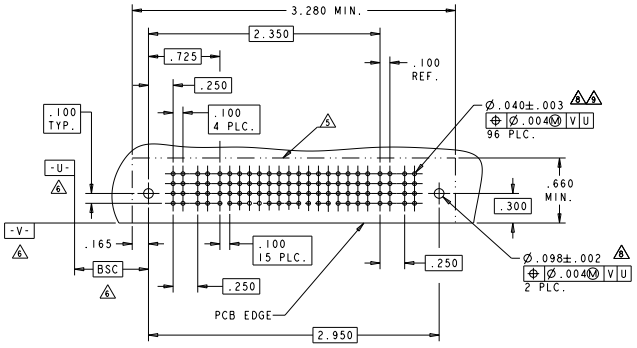

PART NUMBER	ROWS	POWER			SIGNAL						POWER		
		P1	P2	P3	1	2	3	4	5	6	P4	P5	P6
6450130-9	D C B A	PA	PA	PA	Z Y R O	A4 A3 A2 A1	A4 A3 A2 A1	A4 A3 A2 A1	A4 A3 A2 A1	A4 A3 A2 O	PA	PA	PA

3P + 24S + 3ACP

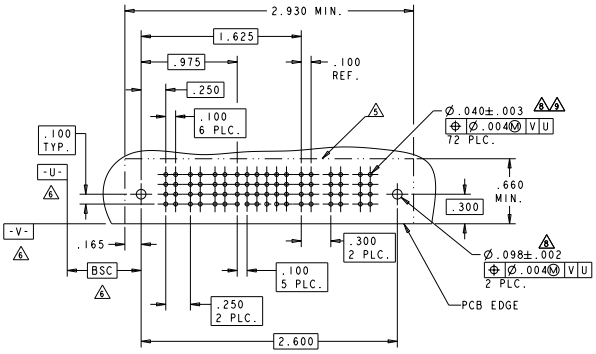

PART NUMBER	ROWS	POWER	SIGNAL						POWER	
		P1	1	2	3	4	5	6	P2	
1-6450130-1	D C B A	PA	A4 A3 A2 A1	A4 A3 A2 A1	A4 A3 A2 A1	A4 A3 A2 A1	A4 A3 A2 O	A4 A3 A2 O	PA	

1P + 24S + 1P

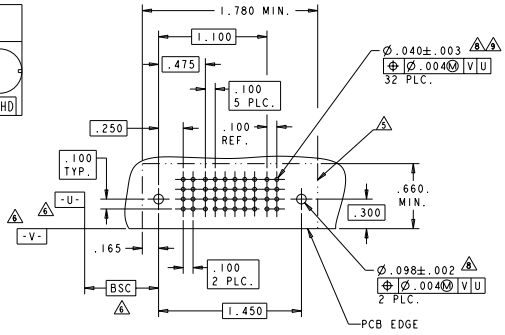

THIS DRAWING IS A CONFIDENTIAL DOCUMENT AND TYCO ELECTRONICS CORPORATION. ANY REPRODUCTION AND/OR DISTRIBUTION WITHOUT WRITTEN CONSENT IS STRICTLY PROHIBITED.

DRN	R.GRZYBOWSKI	14FEB05
CHK	W.PERCHERKE	14FEB05
APD	W.PERCHERKE	
PRODUCT SPEC	108-1973	
APPLICATION SPEC	114-13038	
WEIGHT	-	

DIMENSIONS: INCHES
TOLERANCES UNLESS OTHERWISE SPECIFIED:
0 PLC ±-
1 PLC ±-
2 PLC ±.01
3 PLC ±.005
4 PLC ±.0020
ANGLES ±2°
FINISH -
MATERIAL -

Tyco Electronics Corporation
Shanghai P.R.China 200233

NAME: RIGHT ANGLE HEADER ASSEMBLY W/GUIDES MULTI-BEAM XL

SIZE	CAGE CODE	DRAWING NO	RESTRICTED TO
A1	00779	C-6450130	-

CUSTOMER DRAWING | SCALE 1:1 | SHEET 5 OF 24 | REV L4

AMP 4805 REV 31MAR2000

Downloaded from Elcodis.com electronic components distributor

THIS DRAWING IS UNPUBLISHED. RELEASED FOR PUBLICATION 20
© COPYRIGHT 20 BY TYCO ELECTRONICS CORPORATION. ALL RIGHTS RESERVED.

LOC	DIST
ES	00

REVISIONS

P	LTR	DESCRIPTION	DATE	DWN	APVD
	-	SEE SHEET 1	-	-	-

PART NUMBER	ROWS
1-6450130-2	D C B A
2P + 88S + 1P	

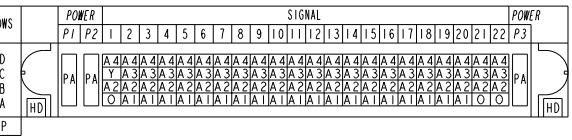

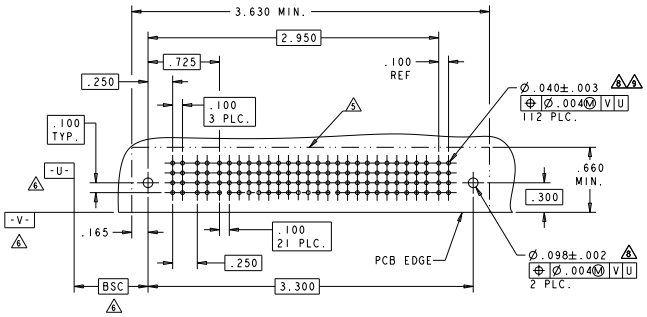

PART NUMBER	ROWS
1-6450130-3	D C B A
2P + 120S + 1P	

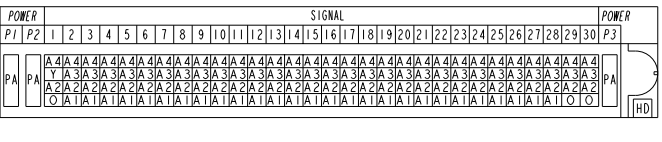

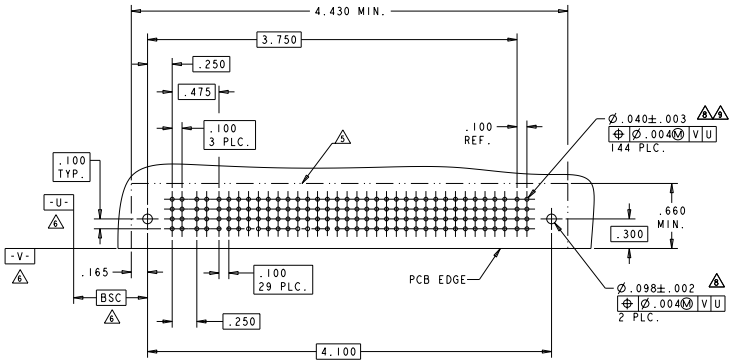

PART NUMBER	ROWS
1-6450130-4	D C B A
3ACP + 24S + 6P	

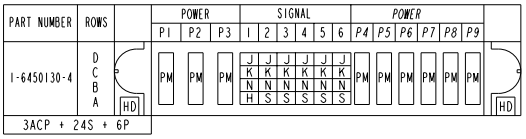

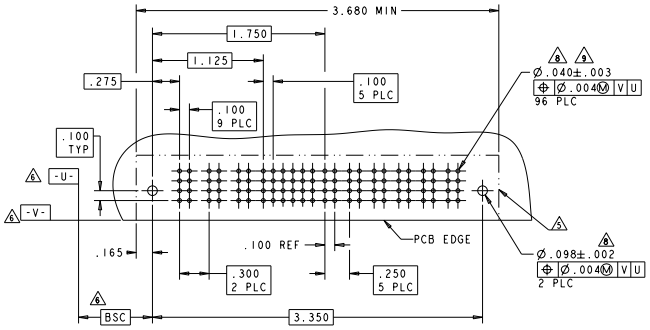

PART NUMBER	ROWS
1-6450130-7	D C B A
2P + 24S + 2P	

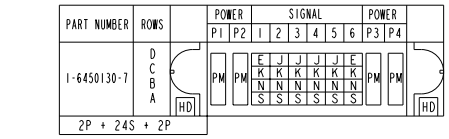

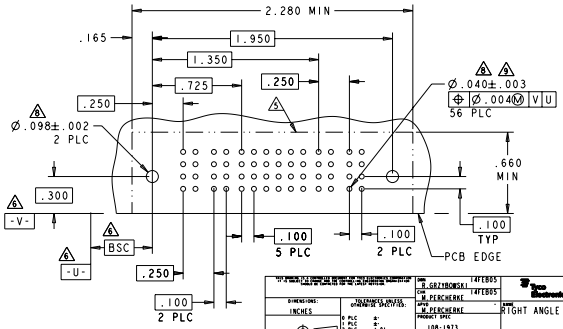

DWN R.GRZYBOWSKI 14FEB05		Tyco Electronics Corporation Shanghai P.R.China 200233	
CKD M.PERCHERKE 14FEB05			
APD M.PERCHERKE		NAME RIGHT ANGLE HEADER ASSEMBLY W/GUIDES MULTI-BEAM XL	
PRODUCT SPEC 108-1973			
APPLICATION SPEC 114-13038		SIZE A1 / CAGE CODE 00779 / DRAWING NO C-6450130	RESTRICTED TO -
WEIGHT -		SCALE 1:1 / SHEET 6 OF 24	REV L4
CUSTOMER DRAWING			

DIMENSIONS: INCHES

TOLERANCES UNLESS OTHERWISE SPECIFIED:
0 PLC ±-
1 PLC ±-
2 PLC ±.01
3 PLC ±.005
4 PLC ±.0025
ANGLES ±2°

MATERIAL -
FINISH -

Downloaded from Elcodis.com electronic components distributor

THIS DRAWING IS UNPUBLISHED. RELEASED FOR PUBLICATION 20
© COPYRIGHT 20 BY TYCO ELECTRONICS CORPORATION. ALL RIGHTS RESERVED.

LOC	DIST
ES	00

REVISIONS

P	LTR	DESCRIPTION	DATE	DWN	APVD
	-	SEE SHEET 1	-	-	-

PART NUMBER	ROWS	POWER								SIGNAL						POWER					
		P1	P2	P3	P4	P5	P6	P7	P8	1	2	3	4	5	6	P9	P10	P11	P12	P13	
1-6450130-8	D C B A	PM	PM	PM	PM	PM	PM	PM	PM	E K N H	J K N S	J F N S	J K G S	J K N S	E K N H	PM	PM	PM	PM	PM	HD
2ACP + 6P + 24S + 5P																					

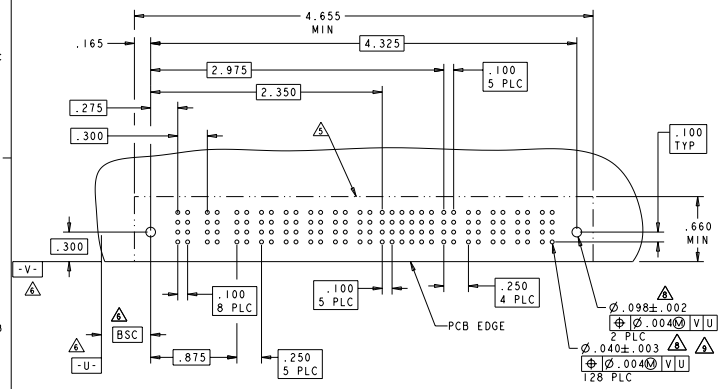

| PART NUMBER | ROWS | POWER | | SIGNAL | | | | | | | | | | | | | | | | | | |

THIS DRAWING IS UNPUBLISHED. RELEASED FOR PUBLICATION 20
© COPYRIGHT 20 BY TYCO ELECTRONICS CORPORATION. ALL RIGHTS RESERVED.

LOC	DIST
ES	00

REVISIONS

P	LTR	DESCRIPTION	DATE	DWN	APVD
	-	SEE SHEET 1	-	-	-

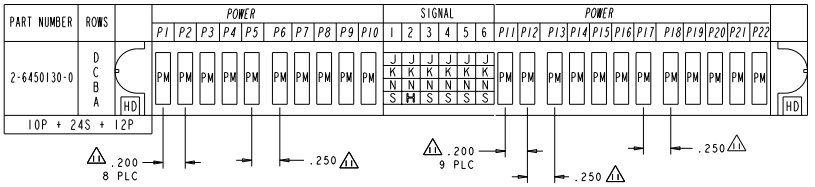

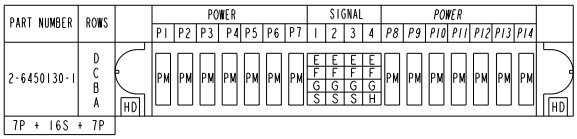

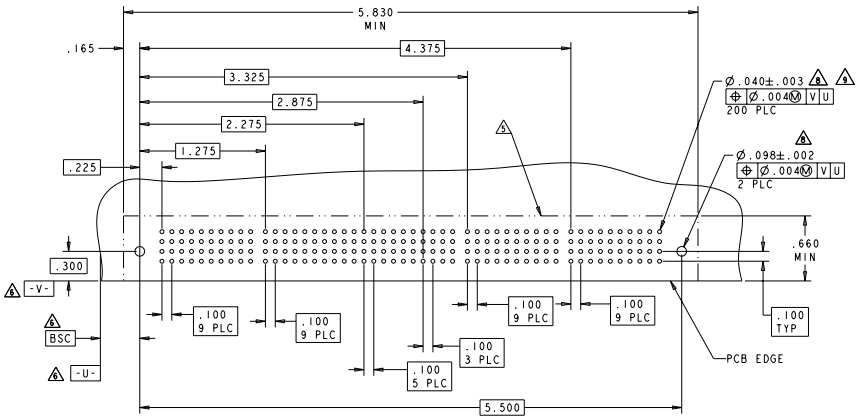

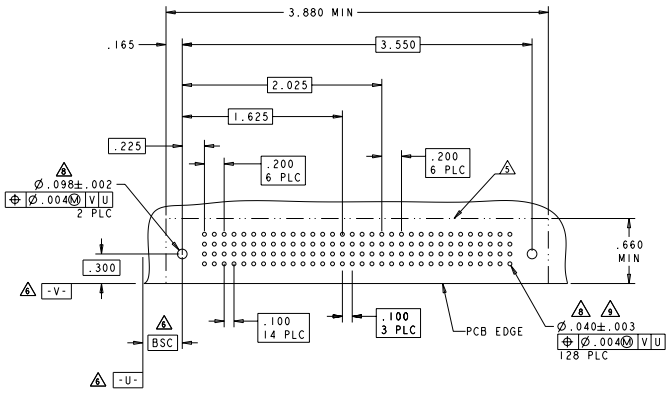

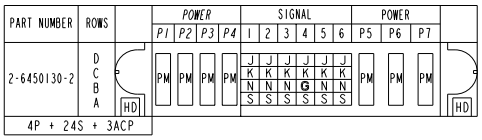

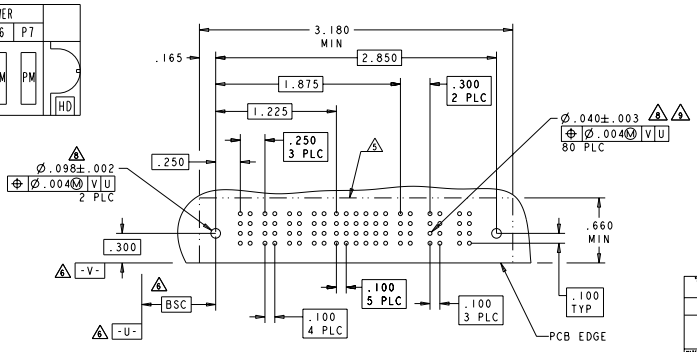

DRN	14FEB05	Tyco Electronics Corporation Shanghai P.R.China 200233
CHK R.GRZYBOWSKI	14FEB05	
APD W.PERCHERKE	14FEB05	
APD W.PERCHERKE		NAME RIGHT ANGLE HEADER ASSEMBLY W/GUIDES MULTI-BEAM XL
PRODUCT SPEC 108-1973		
APPLICATION SPEC 114-13038		SIZE A1 · CAGE CODE 00779 · DRAWING NO C-6450130 · RESTRICTED TO -
WEIGHT -		SCALE 1:1 · SHEET 8 OF 24 · REV L4
CUSTOMER DRAWING		

DIMENSIONS: INCHES

TOLERANCES UNLESS OTHERWISE SPECIFIED:
0 PLC ±-
1 PLC ±-
2 PLC ±.01
3 PLC ±.005
4 PLC ±.0020
ANGLES ±2°

MATERIAL -
FINISH -

AMP 4805 REV 31MAR2000

Downloaded from Elcodis.com electronic components distributor

THIS DRAWING IS UNPUBLISHED. RELEASED FOR PUBLICATION 20
© COPYRIGHT 20 BY TYCO ELECTRONICS CORPORATION. ALL RIGHTS RESERVED.

LOC	DIST
ES	00

REVISIONS

P	LTR	DESCRIPTION	DATE	DWN	APVD
-		SEE SHEET 1	-	-	-

PART NUMBER	ROWS
2-6450130-8	D C B A
3P + 68S + 2P	

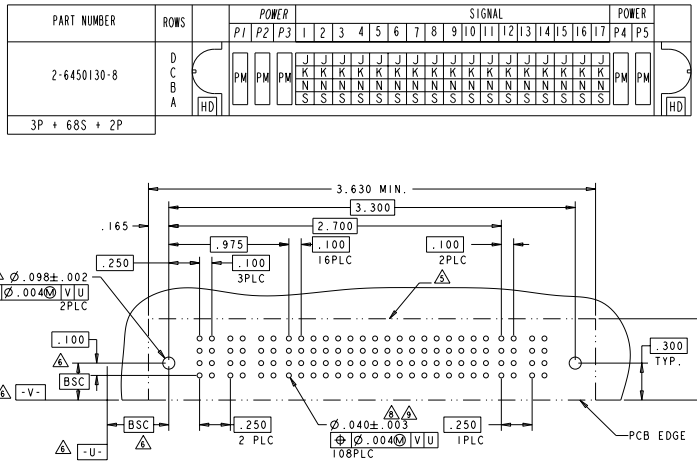

PART NUMBER	ROWS
3-6450130-2	D C B A
5P + 48S + 3P	

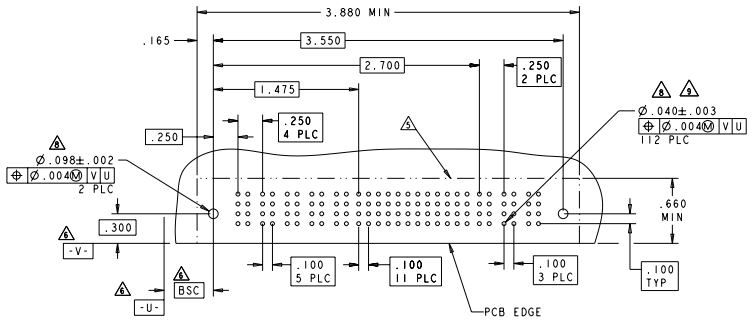

PART NUMBER	ROWS
2-6450130-3	D C B A
6P + 20S + 6P	

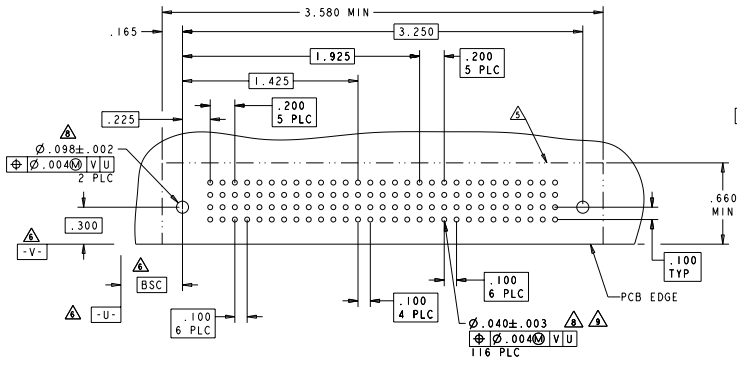

PART NUMBER	ROWS
3-6450130-6	D C B A
12P + 20S + 3ACP	

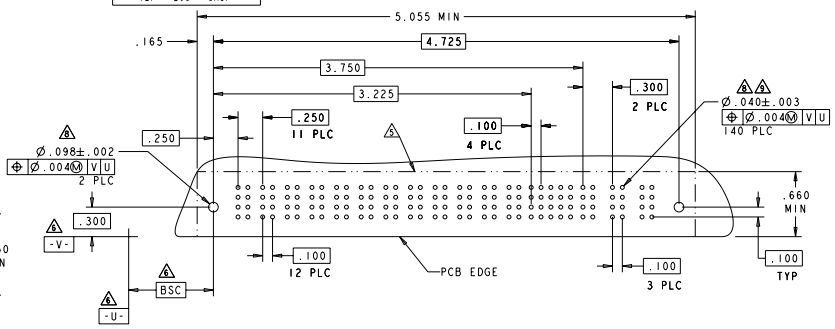

DRN	14FEB05	Tyco Electronics Corporation Shanghai P.R.China 200233
CHK	R.GRZYBOWSKI 14FEB05	
APPD	W.PERCHERKE	
MFG	W.PERCHERKE	RIGHT ANGLE HEADER ASSEMBLY W/GUIDES MULTI-BEAM XL
PRODUCT SPEC	108-1973	
APPLICATION SPEC	114-13038	
WEIGHT	-	
SIZE	A	
CAGE CODE	00779	
DRAWING NO	C-6450130	
RESTRICTED TO	-	
SCALE	1:1	
SHEET	9 OF 24	
REV	L4	

DIMENSIONS: INCHES
TOLERANCES UNLESS OTHERWISE SPECIFIED:
0 PLC ±-
1 PLC ±-
2 PLC ±.01
3 PLC ±.005
4 PLC ±.0020
ANGLES ±2°
FINISH -
MATERIAL -

CUSTOMER DRAWING

AMP 4805 REV 31MAR2000

Downloaded from Elcodis.com electronic components distributor

THIS DRAWING IS UNPUBLISHED. RELEASED FOR PUBLICATION 20
© COPYRIGHT 20 BY TYCO ELECTRONICS CORPORATION. ALL RIGHTS RESERVED.

LOC	DIST
ES	00

REVISIONS

P	LTR	DESCRIPTION	DATE	DWN	APVD
	-	SEE SHEET 1	-	-	-

PART NUMBER	ROWS	POWER P1	POWER P2	POWER P3	SIGNAL 1	SIGNAL 2	SIGNAL 3	SIGNAL 4	POWER P4	POWER P5
3-6450130-9	D C B A	PM	PM	PM	J K N S	J K N S	J K N H	J K N S	PM	PM

3ACP + 16S + 2P

CONTACTS NOT LOADED

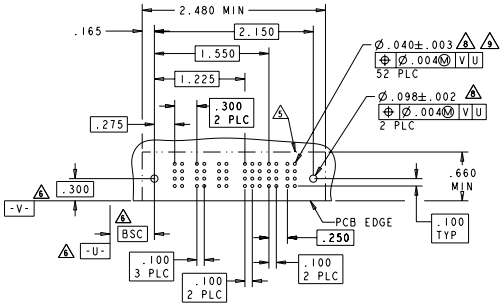

PART NUMBER	ROWS	POWER P1	POWER P2	POWER P3	SIGNAL 1	SIGNAL 2	SIGNAL 3	SIGNAL 4	POWER P4	POWER P5
4-6450130-3	D C B A			PM	J K N S	J K N S	J K N H	J K N S	PM	PM

3ACP + 16S + 2P

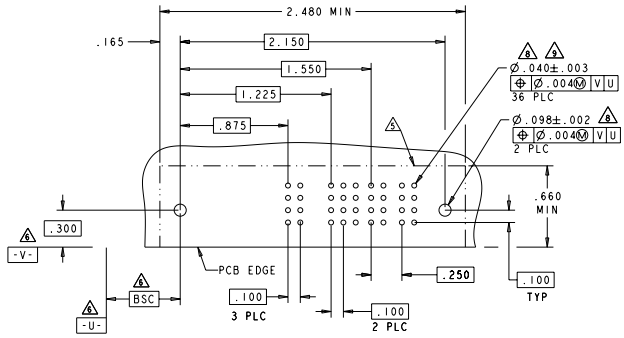

PART NUMBER	ROWS	POWER P1	POWER P2	POWER P3	POWER P4	SIGNAL 1	SIGNAL 2	POWER P5	POWER P6	POWER P7	POWER P8
4-6450130-0	D C B A	PA	PA	PA	PA	Z Y R O	Z Y R O	PA	PA	PA	PA

4P + 8S + 4P

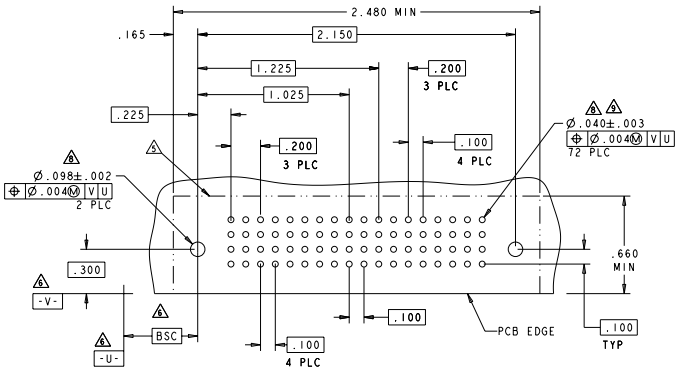

PART NUMBER	ROWS	POWER P1	POWER P2	POWER P3	POWER P4	POWER P5	SIGNAL 1	SIGNAL 2	SIGNAL 3	SIGNAL 4	SIGNAL 5	SIGNAL 6	SIGNAL 7	SIGNAL 8	POWER P6	POWER P7	POWER P8	POWER P9	POWER P10
4-6450130-5	D C B A	PM	PM	PM	PM	PM	J K N H	J K N H	J K N H	J K N H	J K N H	J K N H	J K N H	J K N H	PM	PM	PM	PM	PM

5P + 32S + 5P

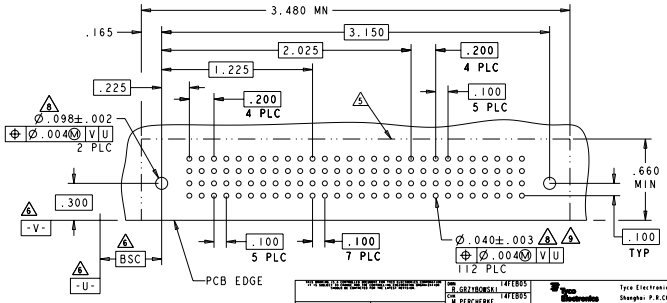

DWN R.GRZYBOWSKI 14FEB05		Tyco Electronics Corporation Shanghai P.R.China 200233	
CHK W.PERCHERKE 14FEB05			
APD W.PERCHERKE		NAME RIGHT ANGLE HEADER ASSEMBLY W/GUIDES MULTI-BEAM XL	
PRODUCT SPEC 108-1973			
APPLICATION SPEC 114-13038		SIZE A	CAGE CODE 00779
WEIGHT -		DRAWING NO C-6450130	RESTRICTED TO -
CUSTOMER DRAWING		SCALE 1:1	SHEET 10 OF 24 REV L4

DIMENSIONS: INCHES

TOLERANCES UNLESS OTHERWISE SPECIFIED:
0 PLC ±-
1 PLC ±-
2 PLC ±.01
3 PLC ±.005
4 PLC ±.0025
ANGLES ±2°

MATERIAL -
FINISH -

AMP 4805 REV 31MAR2000

Downloaded from Elcodis.com electronic components distributor

THIS DRAWING IS UNPUBLISHED. RELEASED FOR PUBLICATION 20
© COPYRIGHT 20 BY TYCO ELECTRONICS CORPORATION. ALL RIGHTS RESERVED.

LOC	DIST
ES	00

REVISIONS

#	LTR	DESCRIPTION	DATE	DWN	APVD
	-	SEE SHEET 1	-	-	-

PART NUMBER	ROWS	POWER P1	P2	P3	P4	SIGNAL 1	2	3	4	5	6	7	8	9	10	POWER P5	P6	P7	P8
4-6450130-8	D C B A	PM	PM	PM	PM	J K N H	J K N S	J K N S	J K N S	J K N S	J K N S	J K N S	J K N S	J K N S	J K N H	PM	PM	PM	PM

4P + 40S + 4P

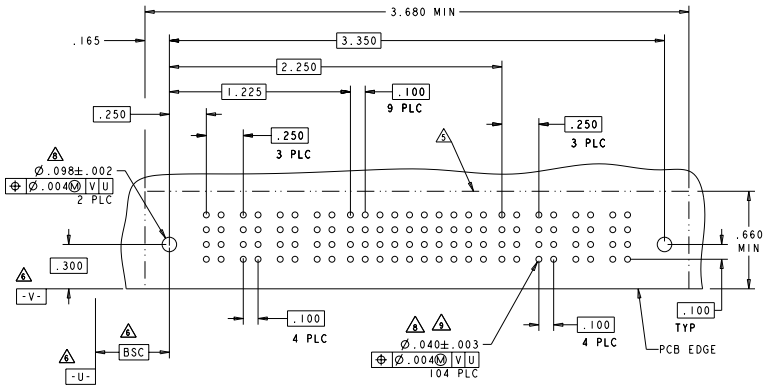

PART NUMBER	ROWS	POWER P1	P2	P3	P4	P5	SIGNAL 1	2	3	4	5	6	POWER P6	P7	P8	P9	P10
5-6450130-0	D C B A	PM	PM	PM	PM	PM	J K N H	J K N H	J K N H	J K N H	J K N H	J K N H	PM	PM	PM	PM	PM

5ACP + 24S + 5ACP

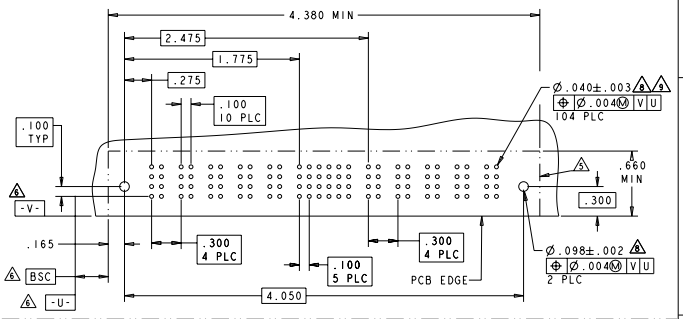

PART NUMBER	ROWS	POWER P1	P2	P3	P4	SIGNAL 1	2	3	4	5	6	POWER P5	P6	P7	P8
4-6450130-9	D C B A	PM	PM	PM	PM	J K N H	J K N H	J K N H	J K N H	J K N H	J K N H	PM	PM	PM	PM

4P + 24S + 4P

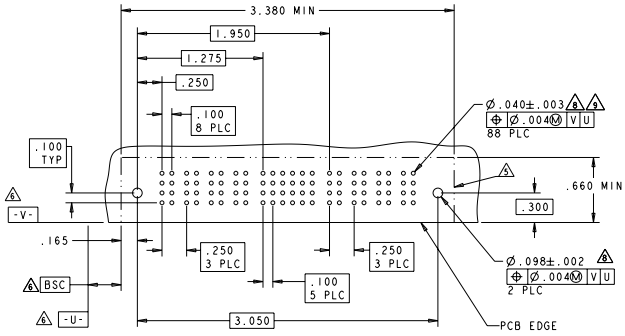

PART NUMBER	ROWS	POWER P1	P2	P3	P4	P5	SIGNAL 1	2	3	4	5	6	7	8	POWER P6	P7	P8	P9	P10
5-6450130-5	D C B A	PM	PM	PM	PM	PM	J K N H	J K N H	J K N H	J K N H	J K N H	J K N H	J K N H	J K N H	PM	PM	PM	PM	PM

5P + 32S + 5P

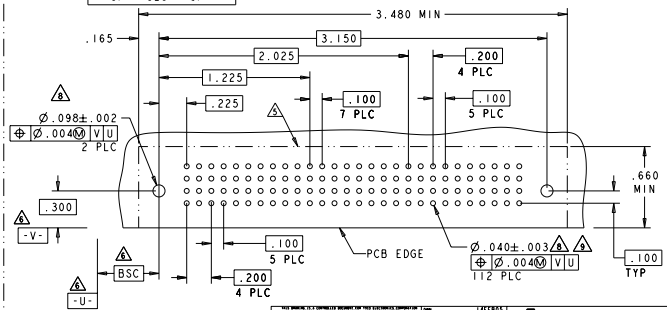

DWN	14FEB05	Tyco Electronics Corporation Shanghai P.R.China 200233	
R.GRZYBOWSKI	14FEB05		
CHK			
W.PERCHERKE			
APVD		NAME	
W.PERCHERKE		RIGHT ANGLE HEADER ASSEMBLY W/GUIDES MULTI-BEAM XL	
PRODUCT SPEC			
108-1973			
APPLICATION SPEC			
114-13038			
WEIGHT		SIZE A	CAGE CODE 00779
		DRAWING NO C-6450130	
		RESTRICTED TO -	
CUSTOMER DRAWING		SCALE 1:1	SHEET 11 OF 24 REV L4

DIMENSIONS: INCHES

TOLERANCES UNLESS OTHERWISE SPECIFIED:
0 PLC ±-
1 PLC ±-
2 PLC ±.01
3 PLC ±.005
4 PLC ±.0025
ANGLES ±2°

FINISH :

MATERIAL :

AMP 4805 REV 31MAR2000

Downloaded from Elcodis.com electronic components distributor

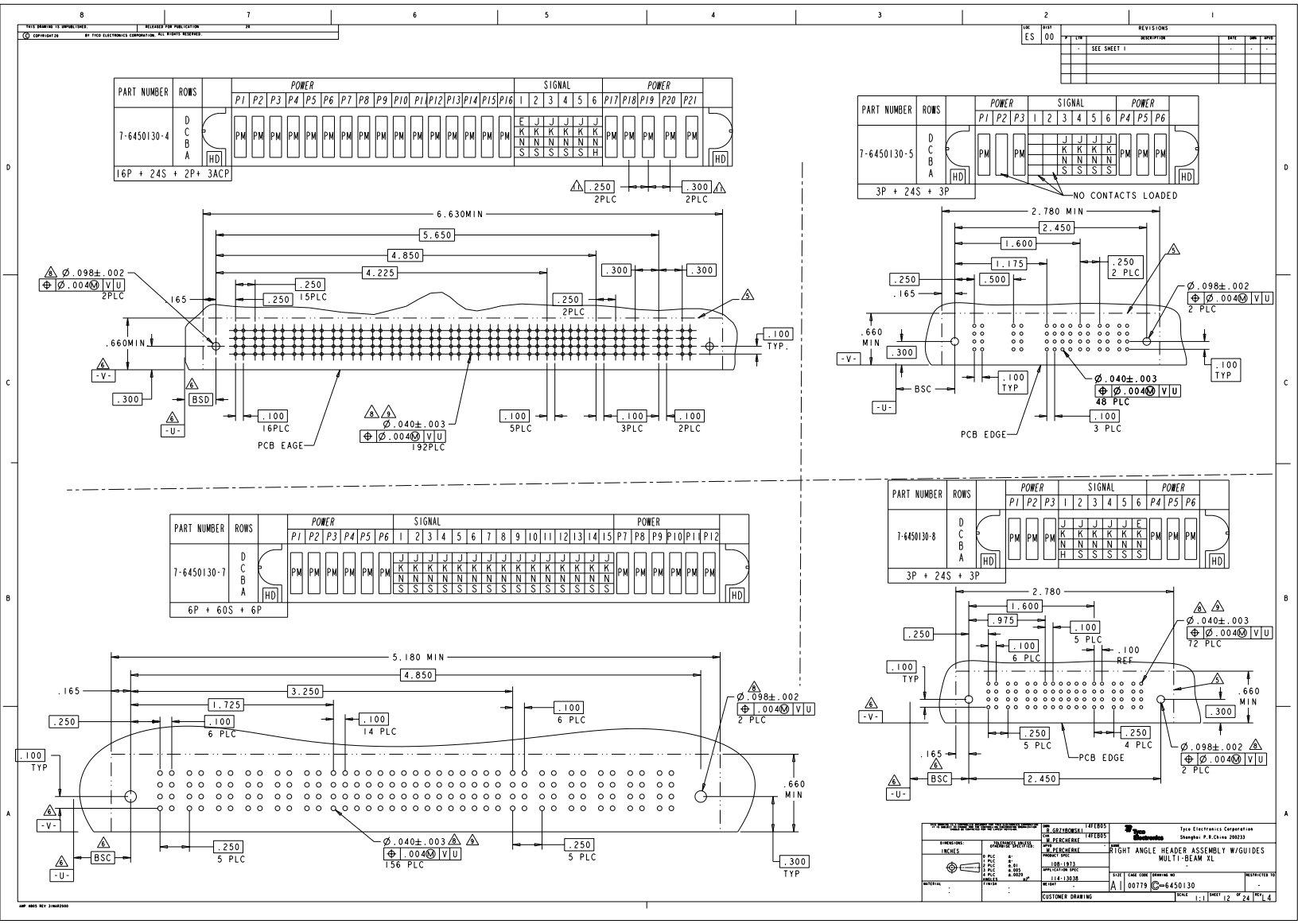

Downloaded from Elcodis.com electronic components distributor

THIS DRAWING IS UNPUBLISHED. RELEASED FOR PUBLICATION 20
© COPYRIGHT 20 BY TYCO ELECTRONICS CORPORATION. ALL RIGHTS RESERVED.

LOC	DIST
ES	00

REVISIONS

#	LTR	DESCRIPTION	DATE	DWN	APVD
	-	SEE SHEET 1	-	-	-

PART NUMBER	ROWS	POWER					SIGNAL					POWER	
		P1	P2	P3	P4	P5	1	2	3	4	5	P6	P7
7-6450130-9	D C B A	PM	PM	PM	PM	PM	J K N S	J G S	J K N S	J K N S	J K N S	PM	PM

5P + 20S + 2P

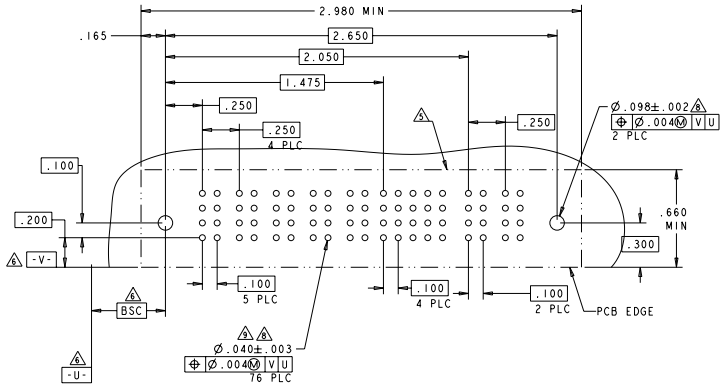

PART NUMBER	ROWS	POWER						SIGNAL						POWER	
		P1	P2	P3	P4	P5	P6	1	2	3	4	5	P7	P8	
8-6450130-0	D C B A	PM	PM	PM	PM	PM	PM	J K N S	J K G S	J K N S	J K N S	J K N S	PM	PM	

6P + 20S + 2P

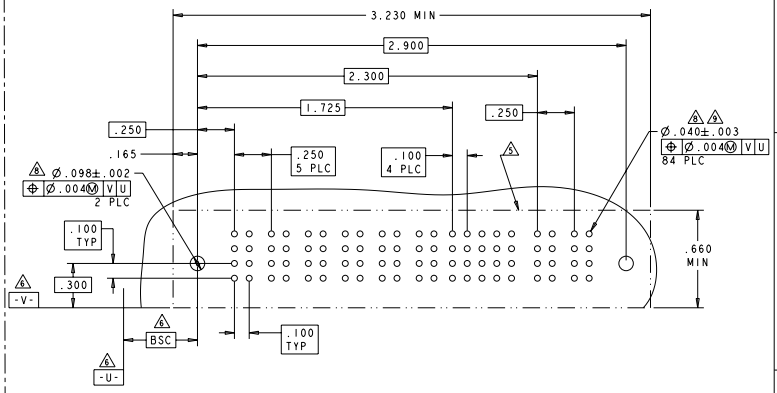

PART NUMBER	ROWS	POWER			SIGNAL						POWER			
		P1	P2	P3	1	2	3	4	5	6	P4	P5	P6	P7	P8
7-6450130-6	D C B A	PM	PM	PM				J K N S	J K N S	J K N S	PM	PM	PM	PM	PM

3ACP + 24S + 5P

NO CONTACTS LOADER

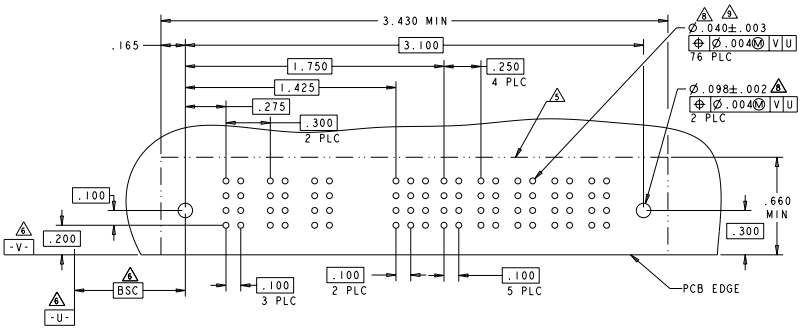

PART NUMBER	ROWS	POWER				SIGNAL						POWER		
		P1	P2	P3	P4	1	2	3	4	5	6	P5	P6	P7
8-6450130-2	D C B A	PM	PM	PM	PM	J K N S	J K N S	J K N S	J K N S	J K N S	J K N H	PM	PM	PM

4P + 24S + 3ACP

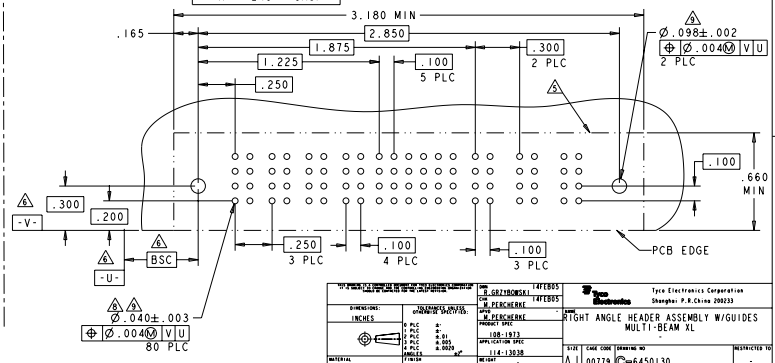

DRN	14FEB05	Tyco Electronics Corporation Shanghai P.R.China 200233
CHK R.GRZYBOWSKI	14FEB05	
APD M.PERCHERKE	14FEB05	
APD M.PERCHERKE		RIGHT ANGLE HEADER ASSEMBLY W/GUIDES MULTI-BEAM XL
PRODUCT SPEC	108-1973	
APPLICATION SPEC	114-13038	
WEIGHT -		SIZE A1 · CAGE CODE 00779 · DRAWING NO C-6450130 · RESTRICTED TO -
CUSTOMER DRAWING		SCALE 1:1 · SHEET 13 OF 24 · REV L4

DIMENSIONS: INCHES

TOLERANCES UNLESS OTHERWISE SPECIFIED:
0 PLC ±-
1 PLC ±-
2 PLC ±.01
3 PLC ±.005
4 PLC ±.0025
ANGLES ±2°

MATERIAL -
FINISH -

AMP 4805 REV 31MAR2000

Downloaded from Elcodis.com electronic components distributor

THIS DRAWING IS UNPUBLISHED. RELEASED FOR PUBLICATION 20
© COPYRIGHT 20 BY TYCO ELECTRONICS CORPORATION. ALL RIGHTS RESERVED.

LOC	DIST
ES	00

REVISIONS

P	LTR	DESCRIPTION	DATE	DWN	APVD
	-	SEE SHEET 1	-	-	-

PART NUMBER	ROWS	POWER P1	P2	P3	SIGNAL 1	2	3	4	5	POWER P4	P5	P6	P7	P8
8-6450130-4	D C B A	PM		PM	J K N S	J K N S	J K N S		J K N H	PM	PM		PM	PM
3P + 20S + 5P														

HD

NO CONTACTS LOADED

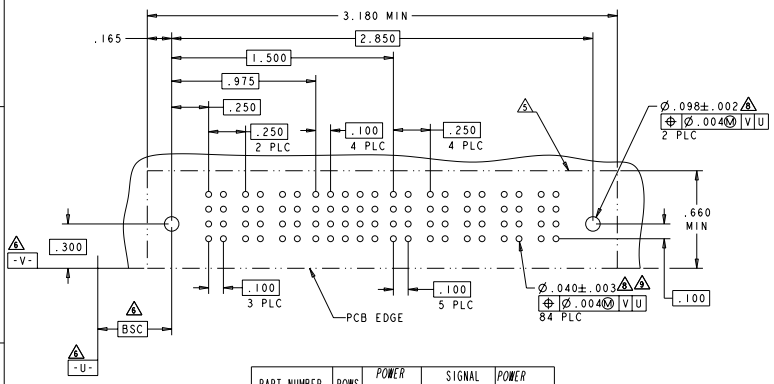

PART NUMBER	ROWS	POWER P1	SIGNAL 1	2	3	4	POWER P2
8-6450130-5	D C B A	PM	J K N S	E K N S	J K N S	E K N S	PM
1P + 16S + 1P							

HD

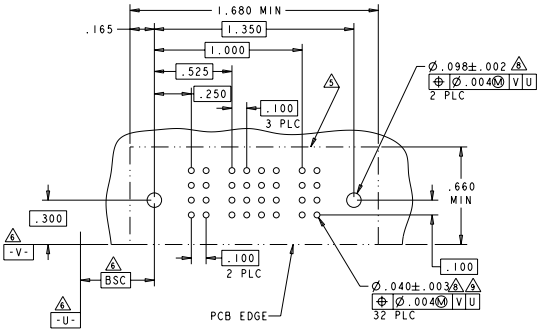

PART NUMBER	ROWS	POWER P1	P2	P3	SIGNAL 1	2	3	4	5	6	POWER P4	P5
5-6450130-1	D C B A	PM	PM	PM	J K N S	J K N S	E K G S	J K N S	J K N S	J K N S	PM	PM
3ACP + 24S + 2P												

HD

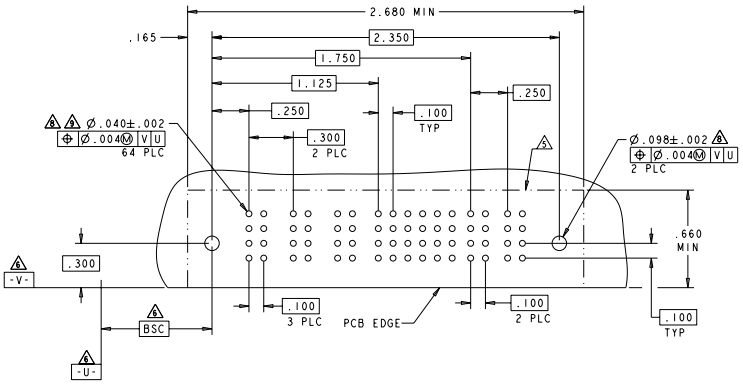

DWN R.GRZYBOWSKI 14FEB05	Tyco Electronics Corporation Shanghai P.R.China 200233	
CHK W.PERCHERKE 14FEB05		
APD W.PERCHERKE	NAME RIGHT ANGLE HEADER ASSEMBLY W/GUIDES MULTI-BEAM XL	
PRODUCT SPEC 108-1973		
APPLICATION SPEC 114-13038	SIZE A1 / CAGE CODE 00779 / DRAWING NO C-6450130	RESTRICTED TO -
WEIGHT -	SCALE 1:1 / SHEET 14 OF 24	REV L4
CUSTOMER DRAWING		

DIMENSIONS: INCHES

TOLERANCES UNLESS OTHERWISE SPECIFIED:
0 PLC ±-
1 PLC ±-
2 PLC ±.01
3 PLC ±.005
4 PLC ±.0020
ANGLES ±2°

MATERIAL -
FINISH -

Downloaded from Elcodis.com electronic components distributor

THIS DRAWING IS UNPUBLISHED. RELEASED FOR PUBLICATION 20
© COPYRIGHT 20 BY TYCO ELECTRONICS CORPORATION. ALL RIGHTS RESERVED.

LOC	DIST
ES	00

REVISIONS

#	LTR	DESCRIPTION	DATE	DWN	APVD
	-	SEE SHEET 1	-	-	-

PART NUMBER	ROWS	POWER P1	P2	P3	P4	SIGNAL 1	2	3	4	5	6	POWER P5	P6
5-6450130-8	D C B A	PM	PM	PM	PM	J K N S	J K N S	J K N S	E K N S	J K N S	J K N S	PM	PM

4P + 24S + 2P

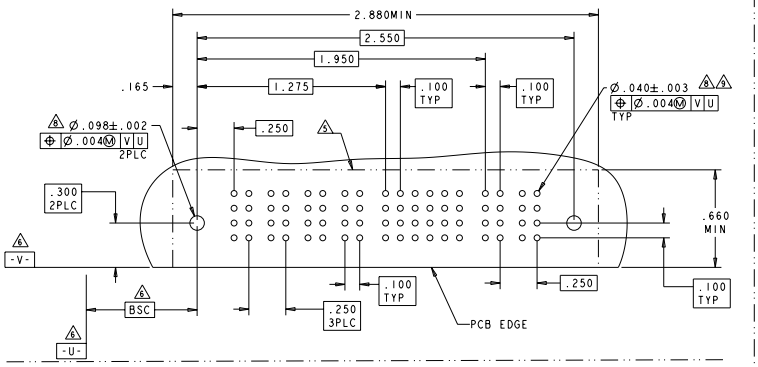

PART NUMBER	ROWS	POWER P1	P2	SIGNAL 1	2	3	4	5	6	7	8	9	10	11	12	13	14	15	16	POWER P3	P4
8-6450130-7	D C B A	PA	PA	A4 A3 A2 A1	A4 A3 A2 A1	A4 A3 A2 A1	A4 A3 A2 A1	A4 A3 A2 A1	A4 A3 A2 A1	A4 A3 A2 A1	A4 A3 A2 A1	A4 A3 A2 A1	A4 A3 A2 A1	A4 A3 A2 A1	A4 A3 A2 A1	A4 A3 A2 A1	A4 A3 A2 A1	A4 A3 A2 O	A4 A3 A2 O	PA	PA

2P + 64S + 2P

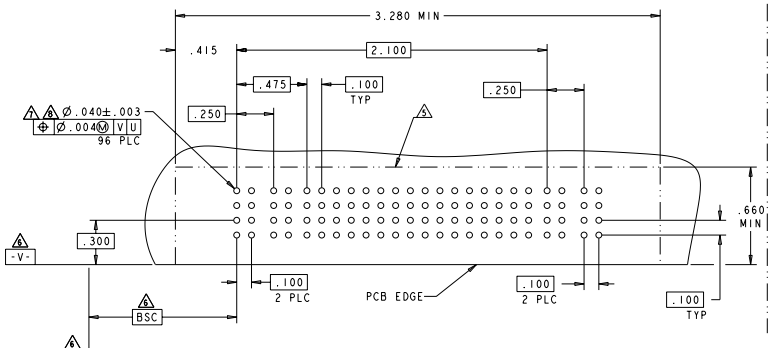

PART NUMBER	ROWS	POWER P1	P2	P3	SIGNAL 1	2	3	4	5	6	POWER P4	P5	P6
8-6450130-6	D C B A	PM		PM			J K N S	J K N S	J K N S		PM	PM	PM

3P + 24S + 3P

NO CONTACTS LOADED

PART NUMBER	ROWS	POWER P1	P2	P3	SIGNAL 1	2	3	4	5	6	POWER P4	P5	P6
9-6450130-0	D C B A	PM		PM			E F G H	E F G H	E F G H		PM	PM	PM

3P + 24S + 3P

NO CONTACT LOADED

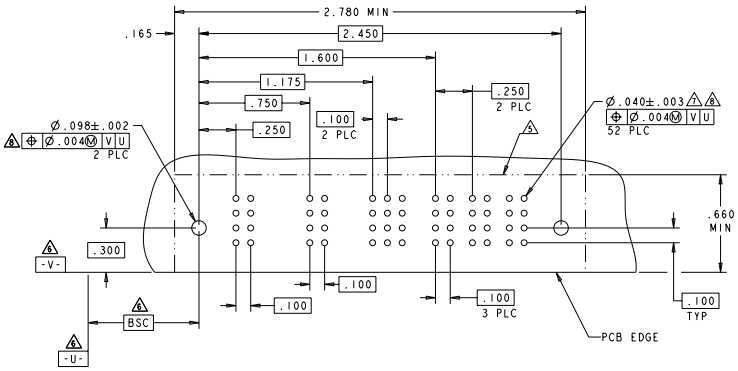

8-6450130-6 AND 9-6450130-0 HAVE THE SAME PCB LAYOUT

DWN R.GRZYBOWSKI 14FEB05	Tyco Electronics Corporation Shanghai P.R.China 200233		
CKD W.PERCHERKE 14FEB05			
APD W.PERCHERKE	NAME RIGHT ANGLE HEADER ASSEMBLY W/GUIDES MULTI-BEAM XL		
PRODUCT SPEC 108-1973			
APPLICATION SPEC 114-13038	SIZE A	CAGE CODE 00779	DRAWING NO C-6450130
WEIGHT -	SCALE 1:1	SHEET 15 OF 24	REV L4
CUSTOMER DRAWING			

DIMENSIONS: INCHES

TOLERANCES UNLESS OTHERWISE SPECIFIED:
0 PLC ±-
1 PLC ±-
2 PLC ±0.01
3 PLC ±0.005
4 PLC ±0.0025
ANGLES ±2°

MATERIAL -
FINISH -

RESTRICTED TO -

AMP 4805 REV 31MAR2000

Downloaded from Elcodis.com electronic components distributor

THIS DRAWING IS UNPUBLISHED. RELEASED FOR PUBLICATION 20
© COPYRIGHT 20 BY TYCO ELECTRONICS CORPORATION. ALL RIGHTS RESERVED.

LOC	DIST
ES	00

REVISIONS

P	LTR	DESCRIPTION	DATE	DWN	APVD
	-	SEE SHEET 1	-	-	-

PART NUMBER	ROWS	POWER	SIGNAL				POWER
		P1	1	2	3	4	P2
8-6450130-9	D C B A	PM	J K N S	J K N S	J F G S	J K N S	PM
1P + 16S + 1P		HD					HD

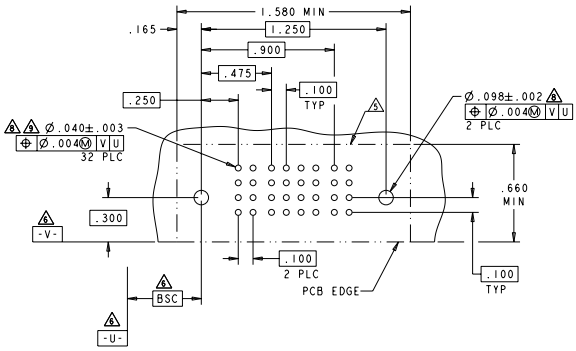

PART NUMBER	ROWS	POWER		SIGNAL						POWER	
		P1	P2	1	2	3	4	5	6	P3	P4
2-6450130-9	D C B A	PM	PM	J K N S	J K N S	J K N S	J K N S	J K N S	J F N S	PM	PM
2P + 24S + 2P		HD									HD

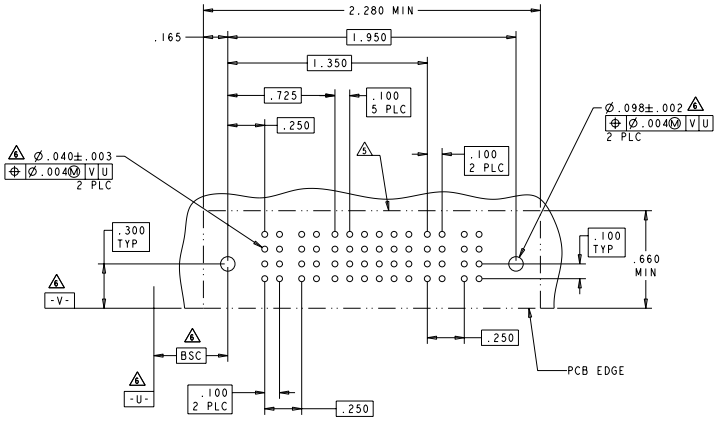

DRN R.GRZYBOWSKI 14FEB05	Tyco Electronics Corporation Shanghai P.R.China 200233	
CHK W.PERCHERKE 14FEB05		
APVD W.PERCHERKE	NAME RIGHT ANGLE HEADER ASSEMBLY W/GUIDES MULTI-BEAM XL	
PRODUCT SPEC 108-1973		
APPLICATION SPEC 114-13038	SIZE A1 / CAGE CODE 00779 / DRAWING NO C-6450130	RESTRICTED TO -
WEIGHT -	SCALE 1:1 / SHEET 16 OF 24	REV L4
CUSTOMER DRAWING		

DIMENSIONS: INCHES

TOLERANCES UNLESS OTHERWISE SPECIFIED:
0 PLC ±:
1 PLC ±:
2 PLC ±.01
3 PLC ±.005
4 PLC ±.0020
ANGLES ±2°

MATERIAL -
FINISH -

Downloaded from Elcodis.com electronic components distributor

THIS DRAWING IS UNPUBLISHED. RELEASED FOR PUBLICATION 20
© COPYRIGHT 20 BY TYCO ELECTRONICS CORPORATION. ALL RIGHTS RESERVED.

LOC	DIST
ES	00

REVISIONS

P	LTR	DESCRIPTION	DATE	DWN	APVD
	-	SEE SHEET 1	-	-	-

PART NUMBER	ROWS	POWER P1	POWER P2	SIGNAL 1	SIGNAL 2	SIGNAL 3	SIGNAL 4	SIGNAL 5	SIGNAL 6	POWER P3	POWER P4
4-6450130-2	D	PM	PM	J	J	J	J	J	E	PM	PM
	C			K	K	K	K	K	K		
	B			N	N	N	N	N	N		
	A			S	S	S	S	S	S		
2P + 24S + 2P		HD									HD

PART NUMBER	ROWS	POWER P1	POWER P2	SIGNAL 1	SIGNAL 2	SIGNAL 3	SIGNAL 4	SIGNAL 5	SIGNAL 6	POWER P3	POWER P4
6-6450130-7	D	PM	PM	J	J	J	J	J	J	PM	PM
	C			K	K	K	K	K	K		
	B			N	N	N	G	N	N		
	A			S	S	S	S	S	S		
2P + 24S + 2P		HD									HD

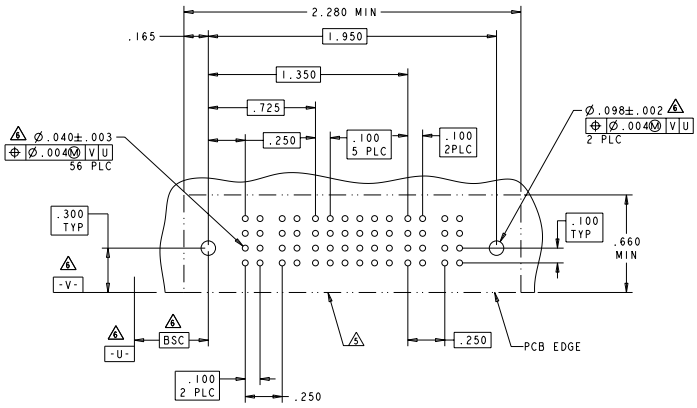

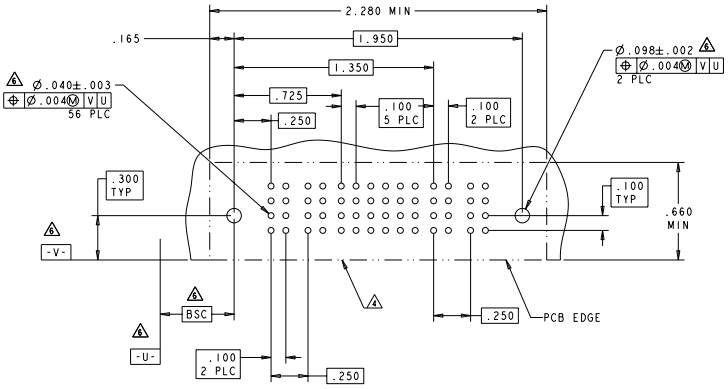

PART NUMBER	ROWS	POWER P1	POWER P2	SIGNAL 1	SIGNAL 2	SIGNAL 3	SIGNAL 4	SIGNAL 5	SIGNAL 6	POWER P3	POWER P4
8-6450130-8	D	PM	PM	E	E	E	E	E	E	PM	PM
	C			F	F	F	F	F	F		
	B			G	G	G	G	G	G		
	A			H	H	H	H	H	S		
2P + 24S + 2P		HD									HD

LAYOUT OF PART 8-6450130-8 IS SAME AS 6-6450130-7.

DWN R.GRZYBOWSKI 14FEB05	Tyco Electronics Corporation	
CHK M.PERCHERKE 14FEB05	Shanghai P.R.China 200233	
APD M.PERCHERKE	NAME RIGHT ANGLE HEADER ASSEMBLY W/GUIDES MULTI-BEAM XL	
PRODUCT SPEC 108-1973		
APPLICATION SPEC 114-13038	SIZE A1 / CAGE CODE 00779 / DRAWING NO C-6450130	RESTRICTED TO -
WEIGHT -	SCALE 1:1 / SHEET 17 OF 24	REV L4
CUSTOMER DRAWING		

DIMENSIONS: INCHES
TOLERANCES UNLESS OTHERWISE SPECIFIED:
0 PLC ±-
1 PLC ±-
2 PLC ±.01
3 PLC ±.005
4 PLC ±.0020
ANGLES ±2°
FINISH -
MATERIAL -

AMP 4805 REV 31MAR2000

Downloaded from Elcodis.com electronic components distributor

THIS DRAWING IS UNPUBLISHED. RELEASED FOR PUBLICATION 20
© COPYRIGHT 20 BY TYCO ELECTRONICS CORPORATION. ALL RIGHTS RESERVED.

LOC	DIST
ES	00

REVISIONS

P	LTR	DESCRIPTION	DATE	DWN	APVD
	-	SEE SHEET 1	-	-	-

PART NUMBER	ROWS		POWER		SIGNAL			POWER					
			P1	P2	1	2	3	P3	P4	P5	P6	P7	
9-6450130-2	D C B A	HD	PM	PM	J K N S	J K N S	J K N S	PM	PM	PM	PM	PM	HD
2P + 12S + 5P													

K2

PART NUMBER	ROWS		POWER				SIGNAL							POWER				
			P1	P2	P3	P4	1	2	3	4	5	6	7	P5	P6	P7	P8	
2-6450130-4	D		PA	PA	PA	PA	A4	A4	A4	A4	A4	A4	A4	PA	PA	PA	PA	
	C						A3	A3	A3	A3	A3	A3	A3					
	B						A2	A2	A2	A2	A2	A2	A2					
	A	HD					A1	A1	A1	A1	A1	A1	A1					HD
4HDP + 28S + 4HDP																		

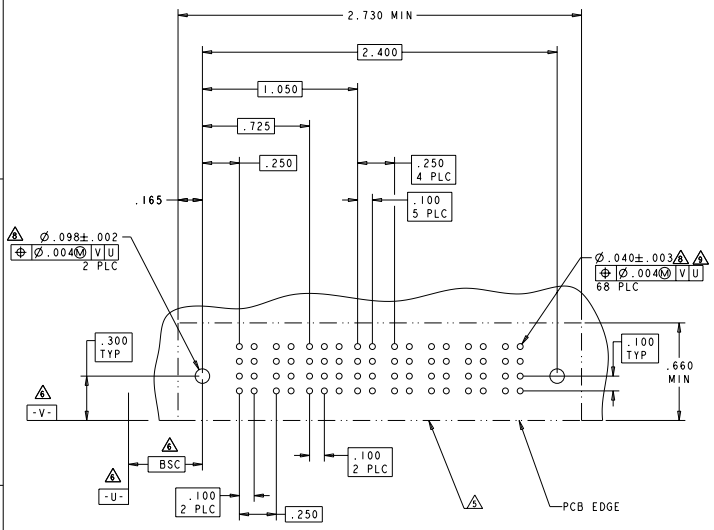

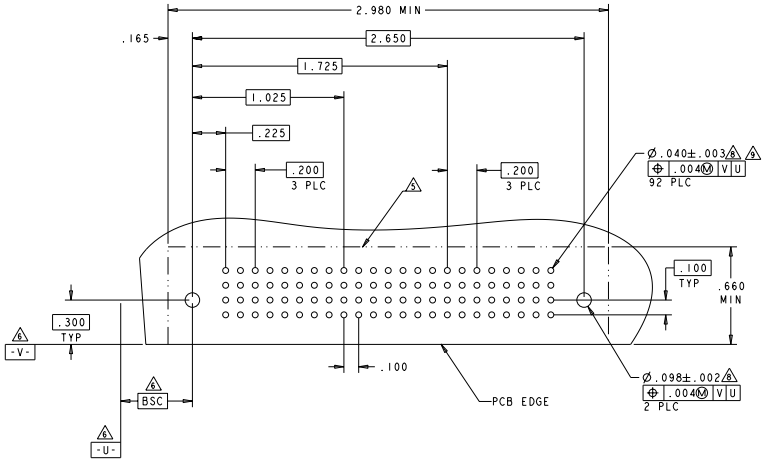

DRN R.GRZYBOWSKI 14FEB05	Tyco Electronics Corporation	
CHK M.PERCHERKE 14FEB05	Shanghai P.R.China 200233	
APD M.PERCHERKE	NAME RIGHT ANGLE HEADER ASSEMBLY W/GUIDES MULTI-BEAM XL	
PRODUCT SPEC 108-1973		
APPLICATION SPEC 114-13038	SIZE A1 / CAGE CODE 00779 / DRAWING NO C-6450130	RESTRICTED TO -
WEIGHT -	SCALE 1:1 / SHEET 18 OF 24	REV L4
CUSTOMER DRAWING		

DIMENSIONS: INCHES

TOLERANCES UNLESS OTHERWISE SPECIFIED:
0 PLC ±-
1 PLC ±-
2 PLC ±.01
3 PLC ±.005
4 PLC ±.0025
ANGLES ±2°

MATERIAL -
FINISH -

AMP 4805 REV 31MAR2000

Downloaded from Elcodis.com electronic components distributor

THIS DRAWING IS UNPUBLISHED. RELEASED FOR PUBLICATION 20
© COPYRIGHT 20 BY TYCO ELECTRONICS CORPORATION. ALL RIGHTS RESERVED.

LOC	DIST
ES	00

REVISIONS

#	LTR	DESCRIPTION	DATE	DWN	APVD
	-	SEE SHEET 1	-	-	-

K5

PART NUMBER	ROWS
9-6450130-3	D C B A
2P + 16S + 2P	

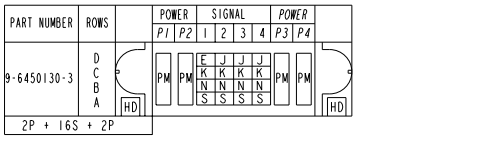

K6

PART NUMBER	ROWS
9-6450130-4	D C B A
4P + 24S + 3ACP	

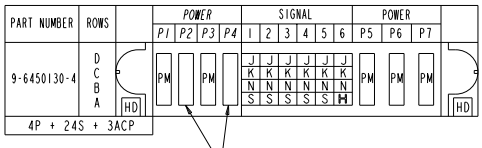

NO CONTACT LOADED

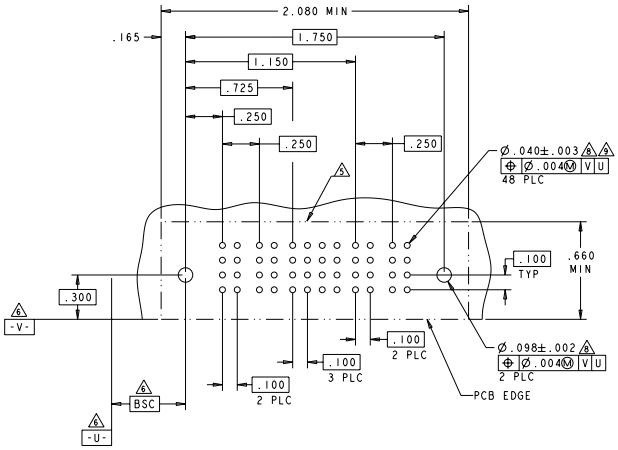

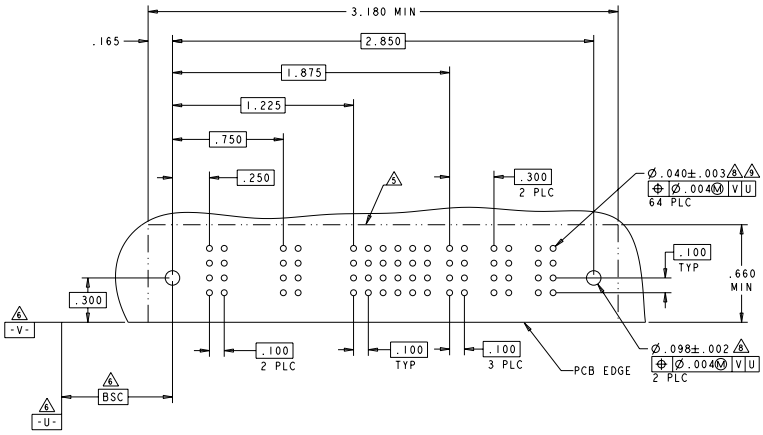

DWN R.GRZYBOWSKI 14FEB05		Tyco Electronics Corporation Shanghai P.R.China 200233	
CHK W.PERCHERKE 14FEB05			
APD W.PERCHERKE		NAME RIGHT ANGLE HEADER ASSEMBLY W/GUIDES MULTI-BEAM XL	
PRODUCT SPEC 108-1973			
APPLICATION SPEC 114-13038		SIZE A1 / CAGE CODE 00779 / DRAWING NO C-6450130	RESTRICTED TO -
WEIGHT -		SCALE 1:1 / SHEET 19 OF 24	REV L4
CUSTOMER DRAWING			

DIMENSIONS: INCHES

TOLERANCES UNLESS OTHERWISE SPECIFIED:
0 PLC ±-
1 PLC ±-
2 PLC ±.01
3 PLC ±.005
4 PLC ±.0020
ANGLES ±2°

MATERIAL -
FINISH -

Downloaded from Elcodis.com electronic components distributor

THIS DRAWING IS UNPUBLISHED. RELEASED FOR PUBLICATION 20
© COPYRIGHT 20 BY TYCO ELECTRONICS CORPORATION. ALL RIGHTS RESERVED.

LOC	DIST
ES	00

REVISIONS

#	LTR	DESCRIPTION	DATE	DWN	APVD
	-	SEE SHEET 1	-	-	-

L1

PART NUMBER	ROWS		POWER P1	POWER P2	POWER P3	SIGNAL 1	SIGNAL 2	SIGNAL 3	SIGNAL 4	SIGNAL 5	SIGNAL 6	POWER P4	POWER P5	
2-6450130-6	D		PM	PM	PM	J	J	J	J	J	J	PM	PM	
	C					K	K	K	K	K	K			
	B					N	N	N	N	N	N			
	A	HD				S	S	S	S	S	S			HD

3ACP + 24S + 2P

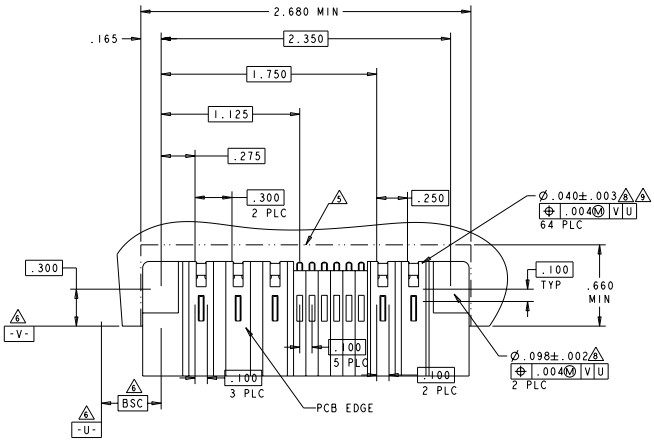

THIS DRAWING IS A CONFIDENTIAL PROPRIETARY DOCUMENT OF TYCO ELECTRONICS CORPORATION. NO REPRODUCTION OR DISCLOSURE TO THIRD PARTIES WITHOUT WRITTEN AUTHORIZATION IS PERMITTED.

DIMENSIONS: INCHES

TOLERANCES UNLESS OTHERWISE SPECIFIED:
0 PLC ±-
1 PLC ±-
2 PLC ±0.01
3 PLC ±0.005
4 PLC ±0.0025
ANGLES ±2°

MATERIAL -
FINISH -

DWN	14FEB05	
CHK	14FEB05	
APPD	R.GRZYBOWSKI	
CHK	W.PERCHERKE	
APPD	W.PERCHERKE	
PRODUCT SPEC	108-1973	
APPLICATION SPEC	114-13038	
WEIGHT	-	

Tyco Electronics Corporation
Shanghai P.R.China 200233

NAME: RIGHT ANGLE HEADER ASSEMBLY W/GUIDES MULTI-BEAM XL

SIZE	CAGE CODE	DRAWING NO	RESTRICTED TO
A1	00779	C-6450130	-

CUSTOMER DRAWING | SCALE 1:1 | SHEET 20 OF 24 | REV L4

AMP 4805 REV 31MAR2000

Downloaded from Elcodis.com electronic components distributor

THIS DRAWING IS UNPUBLISHED. RELEASED FOR PUBLICATION 20
© COPYRIGHT 20 BY TYCO ELECTRONICS CORPORATION. ALL RIGHTS RESERVED.

LOC	DIST
ES	00

REVISIONS

P	LTR	DESCRIPTION	DATE	DWN	APVD
	-	SEE SHEET 1	-	-	-

PART NUMBER	ROWS
5-6450130-6	D C B A
14P + 24S + 12P	

POWER														SIGNAL						POWER												
P1	P2	P3	P4	P5	P6	P7	P8	P9	P10	P11	P12	P13	P14	1	2	3	4	5	6	P15	P16	P17	P18	P19	P20	P21	P22	P23	P24	P25	P26
PM	PM	PM	PM	PM	PM	PM	PM	PM	PM	PM	PM	PM	PM	J K N S	J K N H	J K N S	J K N S	J K N S	J K N S	PM	PM	PM	PM	PM	PM	PM	PM	PM	PM	PM	PM

HD HD

L2

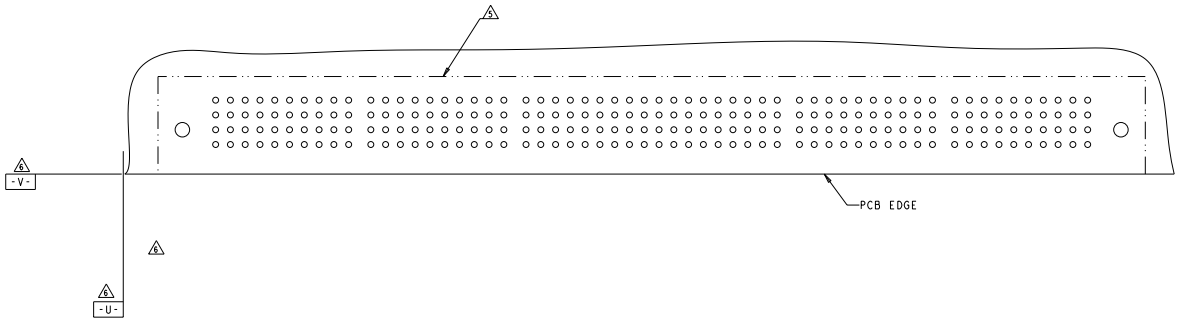

DIMENSIONS: INCHES	TOLERANCES UNLESS OTHERWISE SPECIFIED: 0 PLC ±: 1 PLC ±: 2 PLC ±.01 3 PLC ±.005 4 PLC ±.0020 ANGLES ±2°	MATERIAL : FINISH :	DWN R.GRZYBOWSKI 14FEB05 CHK W.PERCHERKE 14FEB05 APD W.PERCHERKE PRODUCT SPEC 108-1973 APPLICATION SPEC 114-13038 WEIGHT -

Tyco Electronics Corporation
Shanghai P.R.China 200233

NAME RIGHT ANGLE HEADER ASSEMBLY W/GUIDES MULTI-BEAM XL

SIZE	CAGE CODE	DRAWING NO	RESTRICTED TO
A1	00779	C-6450130	-

CUSTOMER DRAWING SCALE 1:1 SHEET 21 OF 24 REV L4

AMP 4805 REV 31MAR2000

Downloaded from Elcodis.com electronic components distributor

THIS DRAWING IS UNPUBLISHED. RELEASED FOR PUBLICATION 20
© COPYRIGHT 20 BY TYCO ELECTRONICS CORPORATION. ALL RIGHTS RESERVED.

LOC	DIST
ES	00

REVISIONS

P	LTR	DESCRIPTION	DATE	DWN	APVD
	-	SEE SHEET 1	-	-	-

PART NUMBER	ROWS	POWER P1	POWER P2	SIGNAL 1	SIGNAL 2	SIGNAL 3	SIGNAL 4	SIGNAL 5	SIGNAL 6	POWER P3	POWER P4	POWER P5
9-6450130-5	D	PM	PM	J	J	E	J	J	J	PM	PM	PM
	C			K	K	K	K	K	K			
	B			N	N	G	N	N	N			
	A			S	S	S	S	S	S			
2P + 24S + 3ACP		HD										HD

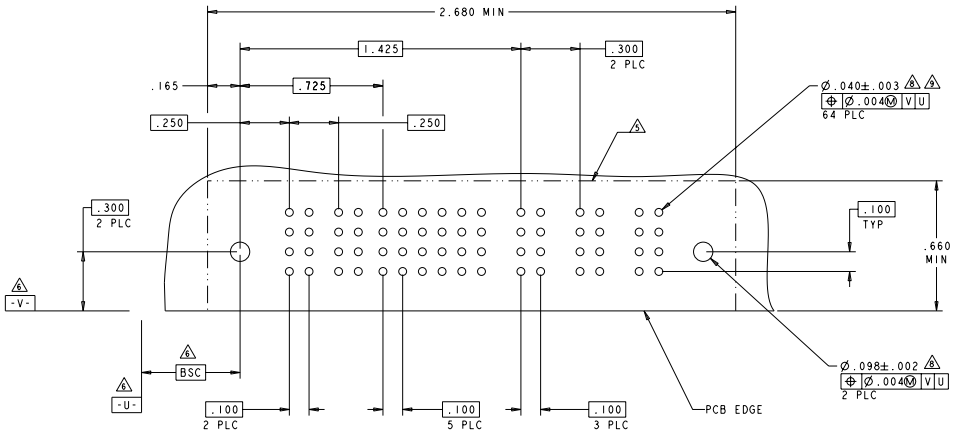

DIMENSIONS: INCHES	TOLERANCES UNLESS OTHERWISE SPECIFIED: 0 PLC ±- / 1 PLC ±- / 2 PLC ±.01 / 3 PLC ±.005 / 4 PLC ±.0020 / ANGLES ±2°	MATERIAL -	FINISH -

DRN R.GRZYBOWSKI 14FEB05
CHK W.PERCHERKE 14FEB05
APD W.PERCHERKE
PRODUCT SPEC 108-1973
APPLICATION SPEC 114-13038
WEIGHT -

Tyco Electronics Corporation
Shanghai P.R.China 200233

NAME RIGHT ANGLE HEADER ASSEMBLY W/GUIDES MULTI-BEAM XL

SIZE	CAGE CODE	DRAWING NO	RESTRICTED TO
A1	00779	C-6450130	-

CUSTOMER DRAWING SCALE 1:1 SHEET 22 OF 24 REV L4

AMP 4805 REV 31MAR2000

Downloaded from Elcodis.com electronic components distributor

THIS DRAWING IS UNPUBLISHED. RELEASED FOR PUBLICATION 20
© COPYRIGHT 20 BY TYCO ELECTRONICS CORPORATION. ALL RIGHTS RESERVED.

LOC	DIST
ES	00

REVISIONS

P	LTR	DESCRIPTION	DATE	DWN	APVD
	-	SEE SHEET 1	-	-	-

L3

PART NUMBER	ROWS	POWER P1	SIGNAL 1	2	3	4	5	POWER P2
9-6450130-6	D C B A	PM	E K N S	J K N S	J K N S			PM
1P + 20S + 1P		HD						HD

NO CONTACTS LOADED

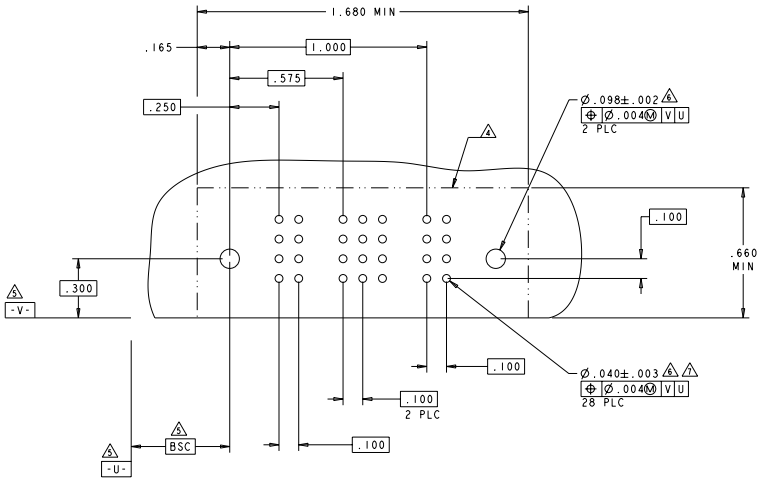

DIMENSIONS: INCHES	TOLERANCES UNLESS OTHERWISE SPECIFIED: 0 PLC ±: 1 PLC ±: 2 PLC ±.01 3 PLC ±.005 4 PLACES ±.0020 ANGLES ±2°	MATERIAL: FINISH:

DWN R.GRZYBOWSKI 14FEB05
CHK W.PERCHERKE 14FEB05
APD W.PERCHERKE
PRODUCT SPEC 108-1973
APPLICATION SPEC 114-13038
WEIGHT

Tyco Electronics Corporation
Shanghai P.R.China 200233

NAME RIGHT ANGLE HEADER ASSEMBLY W/GUIDES MULTI-BEAM XL

SIZE	CAGE CODE	DRAWING NO	RESTRICTED TO
A1	00779	C-6450130	-

CUSTOMER DRAWING SCALE 1:1 SHEET 23 OF 24 REV L4

AMP 4805 REV 31MAR2000

Downloaded from Elcodis.com electronic components distributor

THIS DRAWING IS UNPUBLISHED. RELEASED FOR PUBLICATION 20
© COPYRIGHT 20 BY TYCO ELECTRONICS CORPORATION. ALL RIGHTS RESERVED.

LOC	DIST
ES	00

REVISIONS

P	LTR	DESCRIPTION	DATE	DWN	APVD
	-	SEE SHEET 1	-	-	-

PART NUMBER	ROWS	POWER P1	POWER P2	1	2	3	4	5	6	7	8	9	10	11	12	POWER P3	POWER P4
6-6450130-9	D C B A	PM	PM	EKNH	JKNS	JKNS	JKNS	JKNS	JKNS	JKNS	JKNS	JKNS	JKNS	JKNS	EKNH	PM	PM
2P + 48S + 2P		HD															HD

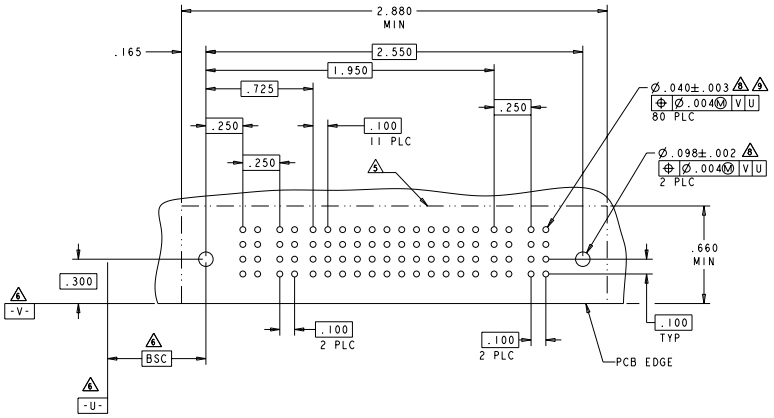

DRN R.GRZYBOWSKI 14FEB05	Tyco Electronics Corporation Shanghai P.R.China 200233	
CHK W.PERCHERKE 14FEB05		
APVD W.PERCHERKE	NAME RIGHT ANGLE HEADER ASSEMBLY W/GUIDES MULTI-BEAM XL	
PRODUCT SPEC 108-1973		
APPLICATION SPEC 114-13038	SIZE A1 / CAGE CODE 00779 / DRAWING NO C-6450130	RESTRICTED TO -
WEIGHT -	SCALE 1:1 / SHEET 24 OF 24	REV L4
CUSTOMER DRAWING		

DIMENSIONS: INCHES

TOLERANCES UNLESS OTHERWISE SPECIFIED:
0 PLC ±-
1 PLC ±-
2 PLC ±.01
3 PLC ±.005
4 PLC ±.0020
ANGLES ±2°

MATERIAL -
FINISH -

AMP 4805 REV 31MAR2000

Downloaded from Elcodis.com electronic components distributor