THIS DRAWING IS UNPUBLISHED. RELEASED FOR PUBLICATION 20
© COPYRIGHT 20 BY TYCO ELECTRONICS CORPORATION. ALL RIGHTS RESERVED.

LOC ES DIST 00

REVISIONS

P	LTR	DESCRIPTION	DATE	DRN	APVD
	N4	REV PER ECR-10-007489	07APR2010	OL	SY
	N5	ADDED NEW DASH NUMBER -61.	21JUL2010	IL	SY
	N6	REV PER ECR-10-016227	04AUG2010	IL	JC

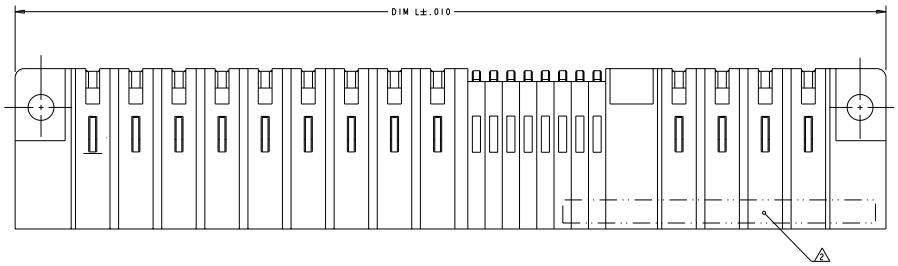

1. OPTIONAL CENTER MODULE WITH Ø.150 THRU HOLE OR HOLD DOWN FEATURE.
2. "AMP", PART NUMBER, AND DATECODE TO BE MARKED IN AREA SHOWN. PARTS UNDER 2.00 LONG MAY BE MARKED ON BOTH SIDES.
3. MATERIAL: HOUSING - GLASS FILLED HIGH TEMP THERMO PLASTIC, UL94 V-0
   SIGNAL CONTACT - COPPER ALLOY
   POWER CONTACT - HIGH CONDUCTIVITY COPPER ALLOY
4. CONTACT PLATING: SIGNAL CONTACTS - .000050 MIN Ni UNDER ALL. .000030 MIN. Au ON CONTACT AREA. .000100 MIN Sn AT PCB INTERFACE.
   POWER CONTACTS - .000050 MIN Ni UNDER ALL. .000030 MIN. Au AT CONTACT AREA. .000100 MIN Sn AT PCB INTERFACE.
5. MECHANICAL CONNECTOR KEEP OUT ZONE.
6. DATUM AND BASIC DIMENSIONS ESTABLISHED BY CUSTOMER.
7. PCB - HOLE DIAMETERS ARE FINISHED HOLE SIZE.
8. PCB - .0453±.0010 DRILLED HOLES PLATED WITH .0003 MIN Sn OVER .001 TO .003 Cu PLATING TO ACHIEVE A .040 DIA HOLE.
10. VARIABLE DIMENSIONS SHOWN ON VIEW (SHEET 5,11)

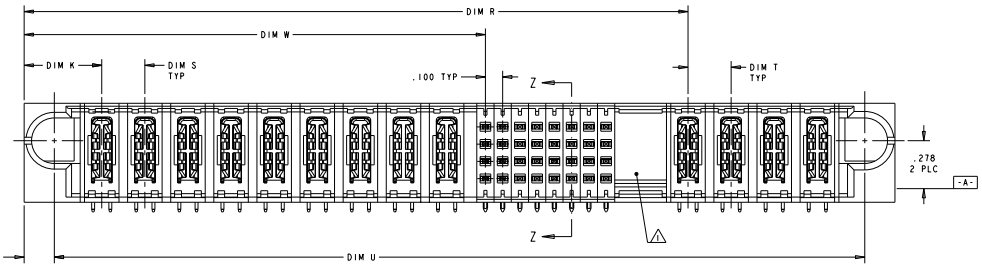

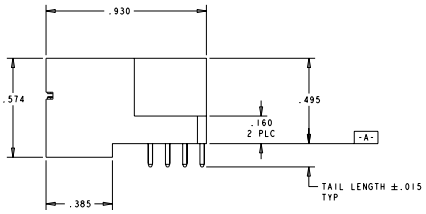

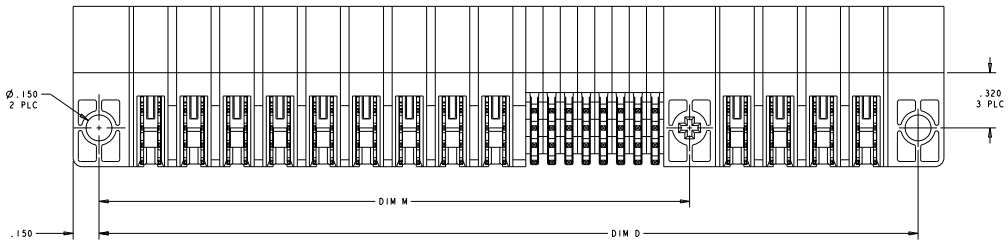

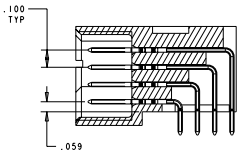

SECTION Z-Z

THIS DRAWING IS A CONVERSION FROM THE ORIGINAL DRAWING. ALL DIMENSIONS, TOLERANCES AND NOTES HAVE BEEN VERIFIED TO BE THE LATEST REVISION.	DRN R.GRZYBOWSKI 28FEB05	Tyco Electronics Corporation Shanghai,P.R.China,200233	
DIMENSIONS: INCHES	CHK M.PERCHERKE 28FEB05	RIGHT ANGLE HEADER ASSEMBLY SOLDER TAILS, W/GUIDES MULTI-BEAM XL	
TOLERANCES UNLESS OTHERWISE SPECIFIED: 0 PLC ±- / 1 PLC ±- / 2 PLC ±.01 / 3 PLC ±.005 / 4 PLC ±.0020 / ANGLES ±2°	APPD M.PERCHERKE	PRODUCT SPEC 108-1973	
		APPLICATION SPEC 114-13038	
MATERIAL 3	FINISH 4	WEIGHT -	SIZE A1 / CAGE CODE 00779 / DRAWING NO C-6450330 / RESTRICTED TO -
		CUSTOMER DRAWING	SCALE 1:1 / SHEET 1 OF 16 / REV N6

AMP 4005 REV 31MAR2000

Pro/ENGINEER DRAWING

Downloaded from Elcodis.com electronic components distributor

THIS DRAWING IS UNPUBLISHED. RELEASED FOR PUBLICATION 20
© COPYRIGHT 20 BY TYCO ELECTRONICS CORPORATION. ALL RIGHTS RESERVED.

LOC	DIST
ES	00

REVISIONS

#	LTR	DESCRIPTION	DATE	DRN	APVD
	-	SEE SHEET 1	-	-	-

N6	2.300	.250	.250	1.700	1.175	2.350	-	2.650	.450	3P + 16S + 3P	6-6450330-1
N4	7.350	1	1	5.225	3.925	7.400	-	7.700	.475	12P + 48S + 8P	6-6450330-0
	2.600	.250	.250	2.250	1.925	2.650	-	2.950	.450	6P + 8S + 2P	5-6450330-9
	4.500	.300	.300	2.875	2.175	4.550	-	4.850	.475	6ACP + 24S + 6ACP	5-6450330-8
	2.400	.200	.200	2.100	.825	2.450	-	2.750	.450	2P + 48S + 2P	5-6450330-7
	1.700	.250	.250	1.350	.875	1.750	-	2.050	.450	2P + 16S + 2P	5-6450330-6
	1.200	-	-	1.100	.625	1.250	-	1.550	.450	1P + 16S + 1P	5-6450330-5
	3.550	.200	1	2.225	1.925	3.600	-	3.900	.500	7P + 8S + 7P	5-6450330-4
	2.900	.250	.250	2.050	1.375	2.950	-	3.250	.450	4P + 24S + 4P	5-6450330-3
	2.400	.250	.250	1.800	1.125	2.450	-	2.750	.450	3P + 24S + 3P	5-6450330-2
	1.700	.250	.250	1.350	.875	1.750	-	2.050	.450	2P + 16S + 2P	5-6450330-1
	2.800	.250	.300	2.075	1.375	2.850	-	3.150	.450	4P + 24S + 3ACP	5-6450330-0
	1.700	.250	.250	1.350	.875	1.750	-	2.050	.450	2P + 16S + 2P	4-6450330-9
	1.575	.250	.250	1.425	.700	1.625	-	1.925	.475	1P + 24S + 1P	4-6450330-7
	1.600	.250	.250	1.250	.925	1.650	-	1.950	.450	2P + 8S + 2P	4-6450330-6
	2.400	.250	.250	2.050	1.375	2.450	-	2.750	.450	4P + 24S + 2P	4-6450330-2
	2.400	.250	.250	1.800	1.125	2.450	-	2.750	.450	3P + 24S + 3P	3-6450330-9
	3.000	.250	.250	2.150	1.425	3.050	-	3.350	.450	4P + 24S + 4P	3-6450330-7
	2.400	.250	.250	1.550	.875	2.450	-	2.750	.450	2P + 24S + 4P	3-6450330-5
	.700	-	-	-	.375	.750	-	1.050	-	0P + 16S + 0P	3-6450330-1
	2.800	.300	.250	1.950	1.275	2.850	-	3.150	.475	3ACP + 24S + 4P	2-6450330-8
	2.800	.300	.300	2.075	1.325	2.850	-	3.150	.475	3ACP + 24S + 3ACP	2-6450330-6
	3.300	.250	.250	2.450	1.375	3.350	-	3.650	.450	4P + 40S + 4P	2-6450330-3
	2.700	.200	.200	2.000	1.225	2.750	-	3.050	.450	4P + 28S + 4P	1-6450330-8
	2.000	.250	.250	1.650	.925	2.050	-	2.350	.450	2P + 24S + 2P	1-6450330-4
	3.150	.250	.250	2.300	1.625	3.200	-	3.500	.450	5P + 24S + 4P	1-6450330-3
	.900	-	-	-	.375	.950	-	1.250	-	0P + 24S + 0P	1-6450330-2
	1.575	.250	.250	1.425	.700	1.625	-	1.925	.475	1P + 24S + 1P	1-6450330-1
	4.000	1	1	2.750	2.075	4.050	-	4.350	.450	2ACP + 5P + 24S + 6P	1-6450330-0
	2.800	.250	.250	1.950	1.375	2.850	-	3.150	.450	4P + 20S + 4P	6450330-9
	1.575	.250	.250	1.425	.700	1.625	-	1.925	.475	1P + 24S + 1P	6450330-8
	3.300	.300	.250	1.950	1.275	3.350	-	3.650	.475	3ACP + 24S + 6P	6450330-7
	1.900	NA	NA	.975	.625	1.950	-	2.250	.450	1P + 12S + 5P	6450330-6
	4.000	NA	NA	2.750	2.075	4.050	-	4.350	.450	3ACP + 4P + 24S + 6P	6450330-5
	2.550	.300	.250	2.150	1.525	2.600	-	2.900	.475	3ACP + 1P + 24S + 2P	6450330-4
	4.350	.250	.250	3.500	2.625	4.400	-	4.700	.450	9P + 32S + 4P	6450330-3
	1.575	.250	.250	1.425	.700	1.625	-	1.925	.475	1P + 24S + 1P	6450330-1
	U	S	T	R	W	D	M	L	K	DESCRIPTION	PART NUMBER

THIS DRAWING IS A CONFIDENTIAL PROPERTY OF TYCO ELECTRONICS CORPORATION AND IS NOT TO BE REPRODUCED OR TRANSMITTED WITHOUT WRITTEN PERMISSION

DIMENSIONS: INCHES

TOLERANCES UNLESS OTHERWISE SPECIFIED:
0 PLC ±-
1 PLC ±-
2 PLC ±.01
3 PLC ±.005
4 PLC ±.0020
ANGLES ±2°

MATERIAL -
FINISH -

DWN	R.GRZYBOWSKI	20FEB05
CHK	W.PERCHERKE	20FEB05
APPD	W.PERCHERKE	-
PRODUCT SPEC	108-1973	
APPLICATION SPEC	114-13038	
WEIGHT	-	

Tyco Electronics Corporation
Shangha.,P.R.China.200233

NAME: RIGHT ANGLE HEADER ASSEMBLY SOLDER TAILS, W/GUIDES MULTI-BEAM XL

SIZE	CAGE CODE	DRAWING NO	RESTRICTED TO
A1	00779	C-6450330	-

CUSTOMER DRAWING | SCALE 1:1 | SHEET 2 OF 16 | REV N6

Downloaded from Elcodis.com electronic components distributor

THIS DRAWING IS UNPUBLISHED. RELEASED FOR PUBLICATION 20
© COPYRIGHT 20 BY TYCO ELECTRONICS CORPORATION. ALL RIGHTS RESERVED.

LOC	DIST
ES	00

REVISIONS

P	LTR	DESCRIPTION	DATE	DWN	APVD
	-	SEE SHEET 1	-	-	-

PART NUMBER	ROWS	POWER P1	SIGNAL 1	2	3	4	5	6	POWER P2
6450330-1	D	PM	J	J	J	J	J	J	PM
	C		K	K	K	K	K	K	
	B		N	N	N	G	N	N	
	A		S	S	S	S	S	S	

1P + 24S + 1P

PART NUMBER	ROWS	POWER P1	SIGNAL 1	2	3	4	5	6	POWER P2
4-6450330-7	D	PM	E	E	E	E	E	J	PM
	C		F	F	F	F	F	K	
	B		N	N	N	N	N	N	
	A		S	S	S	S	S	S	

1P + 24S + 1P

PART NUMBER	ROWS	POWER P1	P2	P3	P4	SIGNAL 1	2	3	4	5	6	POWER P5	P6
6450330-4	D	PM	PM	PM	PM	E	J	J	J	J	E	PM	PM
	C					K	K	F	K	K	K		
	B					N	N	N	N	N	N		
	A					H	S	S	S	S	H		

HD HD

3ACP + 1P + 24S + 2P

.275 REF.

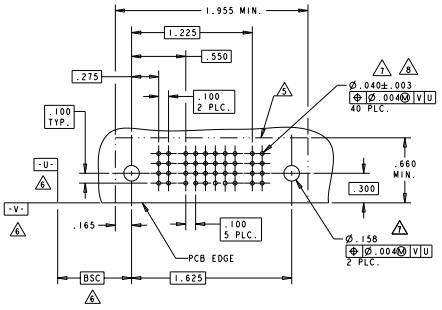

6450330-1 AND 4-6450330-7 SHARE THE SAME LAYOUT

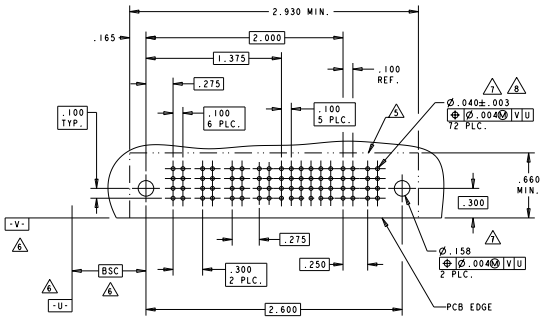

NO CONTACT LOADED

PART NUMBER	ROWS	POWER P1	P2	P3	P4	P5	P6	P7	P8	P9	SIGNAL 1	2	3	4	5	6	7	8	POWER P10	P11	P12	P13
6450330-3	D	PM	PM		PM	PM	PM	PM	PM	PM	J	J	J	J	J	E	E	E	PM	PM	PM	PM
	C										K	K	K	K	K	K	K	K				
	B										N	N	N	N	N	N	N	N				
	A										S	S	S	S	S	S	S	S				

9P + 32S + 4P

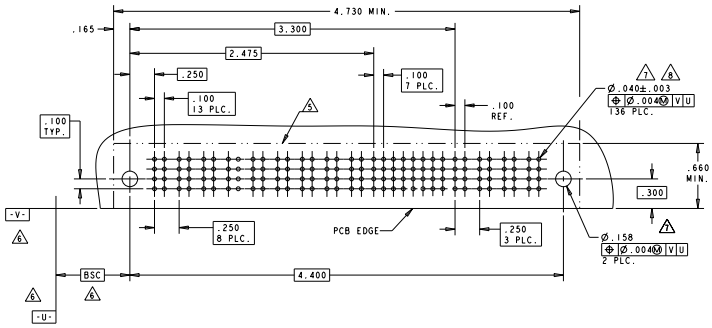

PA	.090
PM	.135
CODE	TAIL LENGTH
POWER CONTACT	

FS	MFBL	.135	A
Z	STD	.090	D
Y	STD	.090	C
R	STD	.090	B
O	STD	.090	A
A4	MLBF	.090	D
A3	MLBF	.090	C
A2	MLBF	.090	B
A1	MLBF	.090	A
E	MLBF	.135	D
F	MLBF	.135	C
G	MLBF	.135	B
H	MLBF	.135	A
J	STD	.135	D
K	STD	.135	C
N	STD	.135	B
S	STD	.135	A
CODE	MATING SEQUENCE	TAIL LENGTH	ROW

SIGNAL CONTACT

THIS DRAWING IS CONSIDERED TYCO ELECTRONICS CORPORATION PROPRIETARY. IT IS MADE AVAILABLE FOR THE PURPOSE OF ASSISTING CUSTOMERS IN MAKING THEIR PRODUCTS FOR TYCO ELECTRONICS.

DIMENSIONS: INCHES

TOLERANCES UNLESS OTHERWISE SPECIFIED:
0 PLC ±-
1 PLC ±-
2 PLC ±.01
3 PLC ±.005
4 PLC ±.0020
ANGLES ±2°
FINISH -

MATERIAL -

DWN 28FEB05 R.GRZYBOWSKI
CHK 28FEB05 W.PERCHERKE
APVD W.PERCHERKE
PRODUCT SPEC 108-1973
APPLICATION SPEC 114-13038
WEIGHT -

Tyco Electronics Corporation
Shanghai, P.R.China.200233

RIGHT ANGLE HEADER ASSEMBLY
SOLDER TAILS, W/GUIDES
MULTI-BEAM XL

SIZE A1 | CAGE CODE 00779 | DRAWING NO C-6450330 | RESTRICTED TO -

CUSTOMER DRAWING | SCALE 1:1 | SHEET 3 OF 16 | REV N6

AMP 4805 REV 31MAR2000

Downloaded from Elcodis.com electronic components distributor

THIS DRAWING IS UNPUBLISHED. RELEASED FOR PUBLICATION 20
© COPYRIGHT 20 BY TYCO ELECTRONICS CORPORATION. ALL RIGHTS RESERVED.

LOC	DIST
ES	00

REVISIONS

P	LTR	DESCRIPTION	DATE	DWN	APVD
	-	SEE SHEET 1	-	-	-

PART NUMBER	ROWS	POWER							SIGNAL						POWER						
		P1	P2	P3	P4	P5	P6	P7	1	2	3	4	5	6	P8	P9	P10	P11	P12	P13
6450330-5	D C B A	PM	PM	PM	PM	PM	PM	PM	JKNS	JKNS	JKNS	JKNS	JKNS	JKNS	PM	PM	PM	PM	PM	PM

3ACP + 4P + 24S + 6P

PART NUMBER	ROWS	POWER	SIGNAL			POWER				
		P1	1	2	3	P2	P3	P4	P5	P6
6450330-6	D C B A	PM	JKNS	JKNS	JKNS	PM	PM	PM	PM	PM

1P + 12S + 5P

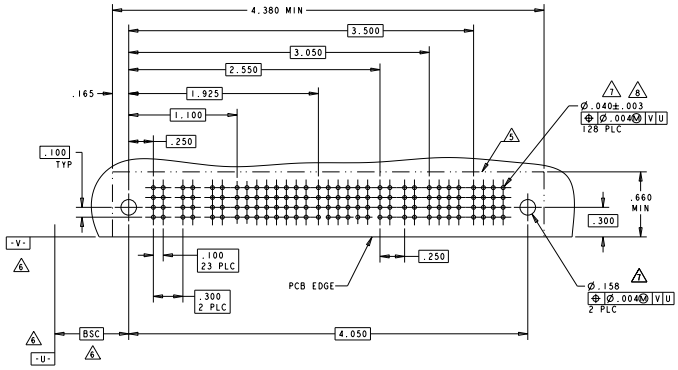

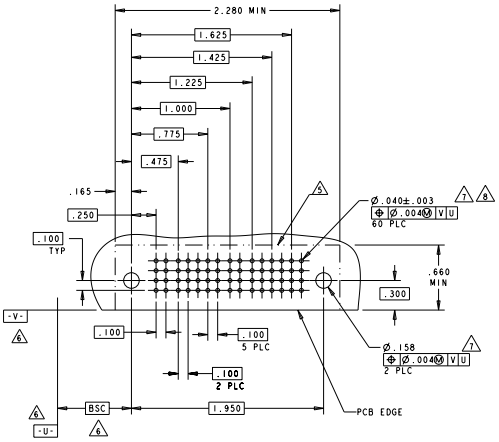

DIMENSIONS: INCHES	TOLERANCES UNLESS OTHERWISE SPECIFIED: 0 PLC ±-; 1 PLC ±-; 2 PLC ±.01; 3 PLC ±.005; 4 PLC ±.0020; ANGLES ±2°	DWN 28FEB05 R.GRZYBOWSKI; CHK 28FEB05 M.PERCHERKE; APD M.PERCHERKE; PRODUCT SPEC 108-1973; APPLICATION SPEC 114-13038; WEIGHT -
MATERIAL -	FINISH -	CUSTOMER DRAWING

Tyco Electronics Corporation
Shanghai, P.R.China.200233

NAME: RIGHT ANGLE HEADER ASSEMBLY SOLDER TAILS, W/GUIDES MULTI-BEAM XL

SIZE	CAGE CODE	DRAWING NO	RESTRICTED TO
A1	00779	C-6450330	-

SCALE 1:1 SHEET 4 OF 16 REV NG

AMP 4805 REV 31MAR2000

Downloaded from Elcodis.com electronic components distributor

THIS DRAWING IS UNPUBLISHED. RELEASED FOR PUBLICATION 20
© COPYRIGHT 20 BY TYCO ELECTRONICS CORPORATION. ALL RIGHTS RESERVED.

LOC	DIST
ES	00

REVISIONS

P	LTR	DESCRIPTION	DATE	DWN	APVD
	-	SEE SHEET 1	-	-	-

PART NUMBER	ROWS	POWER			SIGNAL						POWER					
		P1	P2	P3	1	2	3	4	5	6	P4	P5	P6	P7	P8	P9
6450330-7	D	PM	PM	PM	J	J	J	J	J	J	PM	PM	PM	PM	PM	PM
	C				K	K	K	K	K	K						
	B				N	N	N	N	N	N						
	A				H	S	S	S	S	S						
3ACP + 24S + 6P																

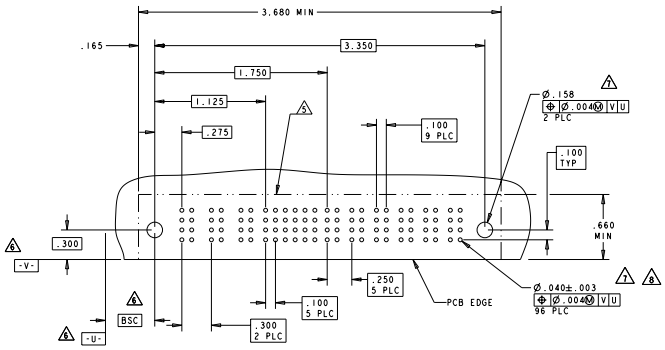

PART NUMBER	ROWS	POWER				SIGNAL				POWER			
		P1	P2	P3	P4	1	2	3	4	5	P5	P6	P7	P8
6450330-9	D	PM	PM	PM	PM	J	J	J	J	J	PM	PM	PM	PM
	C					K	K	K	K	K				
	B					N	N	G	N	N				
	A					S	S	S	S	S				
4P + 20S + 4P														

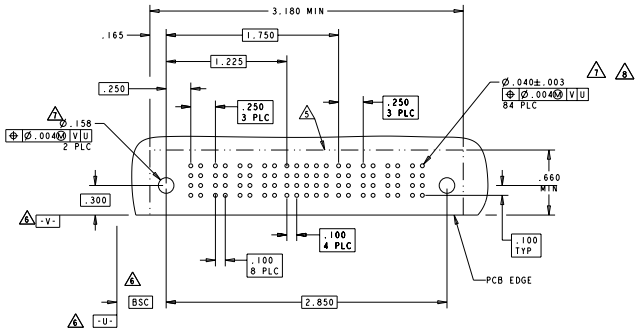

PART NUMBER	ROWS	POWER	SIGNAL						POWER
		P1	1	2	3	4	5	6	P2
6450330-8	D	PM	J	J	J	J	J	J	PM
	C		K	K	K	K	K	K	
	B		N	N	G	G	N	G	
	A		S	S	H	S	S	S	
IP + 24S + 1P									

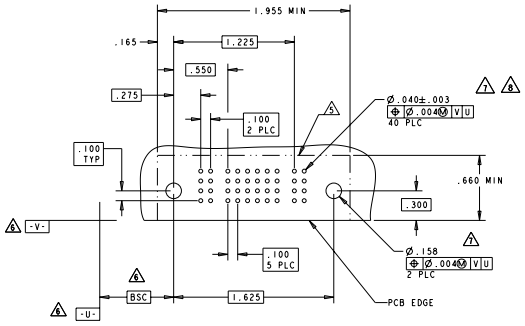

DIMENSIONS: INCHES	TOLERANCES UNLESS OTHERWISE SPECIFIED: 0 PLC ±: 1 PLC ±: 2 PLC ±.01 3 PLC ±.005 4 PLC ±.0020 ANGLES ±2°	MATERIAL: FINISH:

DWN R.GRZYBOWSKI 28FEB05	Tyco Electronics Corporation Shanghai, P.R.China.200233	
CKD W.PERCHERKE 28FEB05		
APD W.PERCHERKE	NAME RIGHT ANGLE HEADER ASSEMBLY SOLDER TAILS, W/GUIDES MULTI-BEAM XL	
PRODUCT SPEC 108-1973		
APPLICATION SPEC 114-13038	SIZE A1 / CAGE CODE 00779 / DRAWING NO C-6450330	RESTRICTED TO -
WEIGHT -		
CUSTOMER DRAWING	SCALE 1:1 / SHEET 5 OF 16	REV NG

AMP 4805 REV 31MAR2000

Downloaded from Elcodis.com electronic components distributor

THIS DRAWING IS UNPUBLISHED. RELEASED FOR PUBLICATION 20
© COPYRIGHT 20 BY TYCO ELECTRONICS CORPORATION. ALL RIGHTS RESERVED.

LOC	DIST
ES	00

REVISIONS

P	LTR	DESCRIPTION	DATE	DWN	APVD
	-	SEE SHEET 1	-	-	-

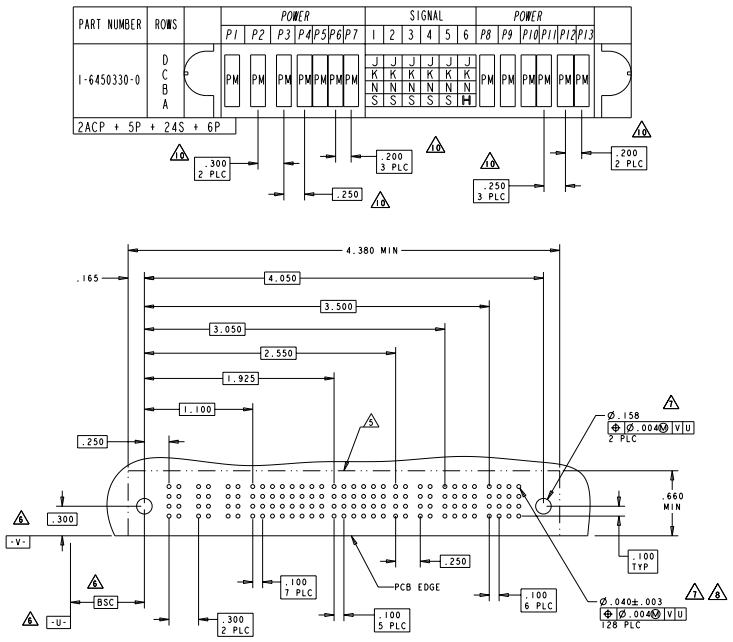

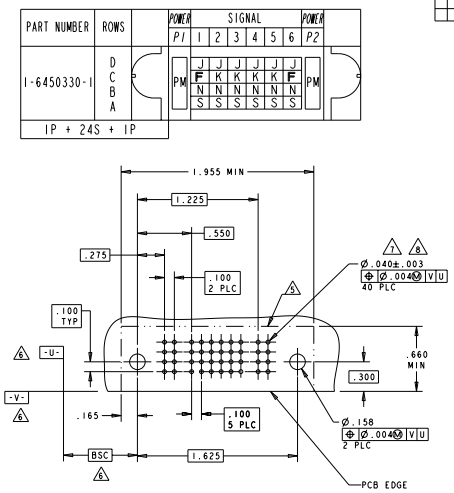

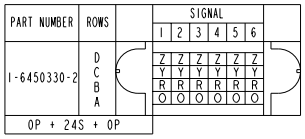

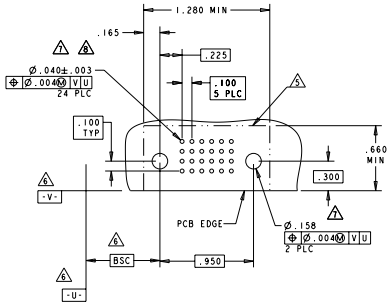

THIS DRAWING IS A CONFIDENTIAL PROPERTY OF TYCO ELECTRONICS CORPORATION AND IS NOT TO BE REPRODUCED OR TRANSMITTED IN WHOLE OR IN PART, WITHOUT THE WRITTEN PERMISSION OF TYCO ELECTRONICS CORPORATION.

DIMENSIONS: INCHES

TOLERANCES UNLESS OTHERWISE SPECIFIED:
0 PLC ±:
1 PLC ±:
2 PLC ±: 0.01
3 PLC ±: 0.005
4 PLC ±: 0.0020
ANGLES ±: 30'

MATERIAL :
FINISH :

DWN	28FEB05	Tyco Electronics Corporation Shanghai,P.R.China,200233
CHK	28FEB05	
APD	W.PERCHERKE	NAME RIGHT ANGLE HEADER ASSEMBLY SOLDER TAILS, W/GUIDES MULTI-BEAM XL
MFG	W.PERCHERKE	
PRODUCT SPEC	108-1973	
APPLICATION SPEC	114-13038	
WEIGHT	-	

SIZE	CAGE CODE	DRAWING NO	RESTRICTED TO
A1	00779	C-6450330	-

CUSTOMER DRAWING SCALE 1:1 SHEET 6 OF 16 REV NG

AMP 4805 REV 31MAR2000

Downloaded from Elcodis.com electronic components distributor

THIS DRAWING IS UNPUBLISHED. RELEASED FOR PUBLICATION 20
© COPYRIGHT 20 BY TYCO ELECTRONICS CORPORATION. ALL RIGHTS RESERVED.

LOC	DIST
ES	00

REVISIONS

#	LTR	DESCRIPTION	DATE	DRN	APVD
	-	SEE SHEET 1	-	-	-

PART NUMBER	ROWS	POWER P1	P2	P3	P4	P5	SIGNAL 1	2	3	4	5	6	POWER P6	P7	P8	P9
1-6450330-3	D C B A	PA	PA	PA	PA	PA	Z Y R A1	Z Y R A1	Z Y R A1	Z Y R A1	Z Y R O	Z Y R O	PA	PA	PA	PA

5P + 24S + 4P

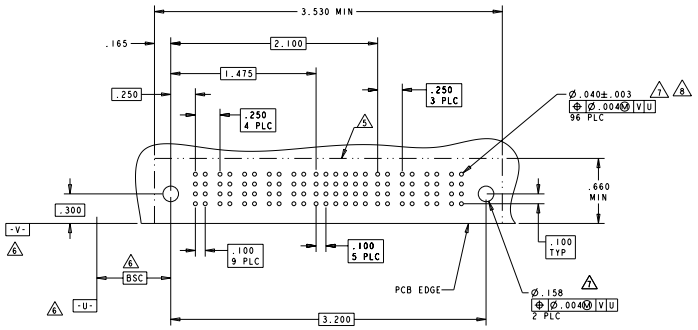

PART NUMBER	ROWS	POWER P1	P2	P3	P4	SIGNAL 1	2	3	4	5	6	7	POWER P5	P6	P7	P8
1-6450330-8	D C B A	PM	PM	PM	PM	J K N S	J K N S	J K N S	J K G S	J K N S	J K N S	J K N S	PM	PM	PM	PM

4P + 28S + 4P

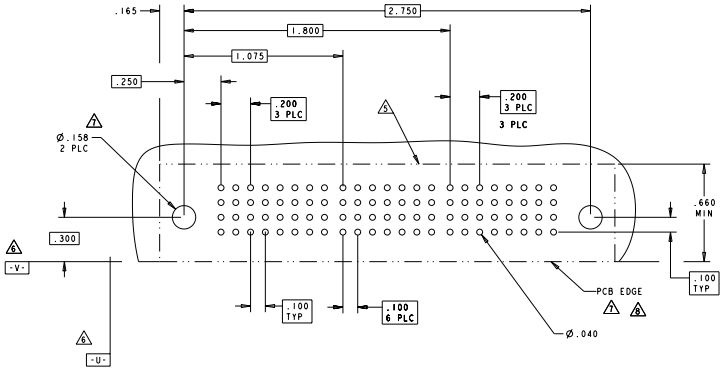

PART NUMBER	ROWS	POWER P1	P2	SIGNAL 1	2	3	4	5	6	POWER P3	P4
1-6450330-4	D C B A	PM	PM	J K N S	J K N S	E K G S	J K N S	J K N S	J K N S	PM	PM

2P + 24S + 2P

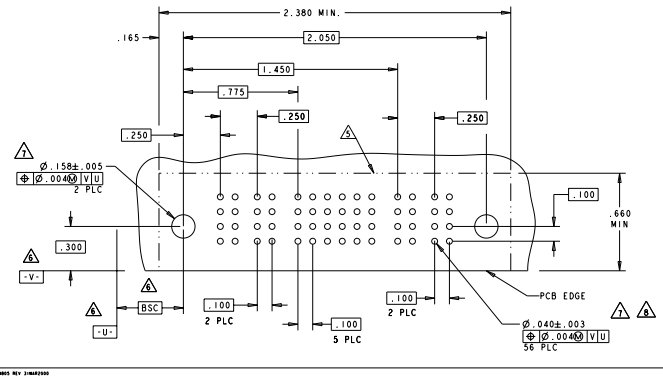

DIMENSIONS: INCHES	TOLERANCES UNLESS OTHERWISE SPECIFIED: 0 PLC ±: 1 PLC ±: 2 PLC ±: 3 PLC ±: 4 PLC ±: ANGLES ±:	DWN R.GRZYBOWSKI 28FEB05 CHK W.PERCHERKE 28FEB05 APD W.PERCHERKE PRODUCT SPEC 108-1973 APPLICATION SPEC 114-13038 WEIGHT -
MATERIAL -	FINISH -	CUSTOMER DRAWING

Tyco Electronics Corporation
Shanghai, P.R.China.200233

NAME: RIGHT ANGLE HEADER ASSEMBLY SOLDER TAILS, W/GUIDES MULTI-BEAM XL

SIZE	CAGE CODE	DRAWING NO	RESTRICTED TO
A1	00779	C-6450330	-

SCALE 1:1 SHEET 7 OF 16 REV NG

AMP 4805 REV 31MAR2000

Downloaded from Elcodis.com electronic components distributor

THIS DRAWING IS UNPUBLISHED. RELEASED FOR PUBLICATION 20
© COPYRIGHT 20 BY TYCO ELECTRONICS CORPORATION. ALL RIGHTS RESERVED.

LOC	DIST
ES	00

REVISIONS

P	LTR	DESCRIPTION	DATE	DWN	APVD
	-	SEE SHEET 1	-	-	-

PART NUMBER	ROWS	POWER P1	P2	P3	P4	SIGNAL 1	2	3	4	5	6	7	8	9	10	POWER P5	P6	P7	P8
2-6450330-3	D C B A	PM	PM	PM	PM	J K N H	J K N S	J K N S	J K N S	J K N S	J K N S	J K N S	J K N S	J K N S	J K N H	PM	PM	PM	PM

4P + 40S + 4P

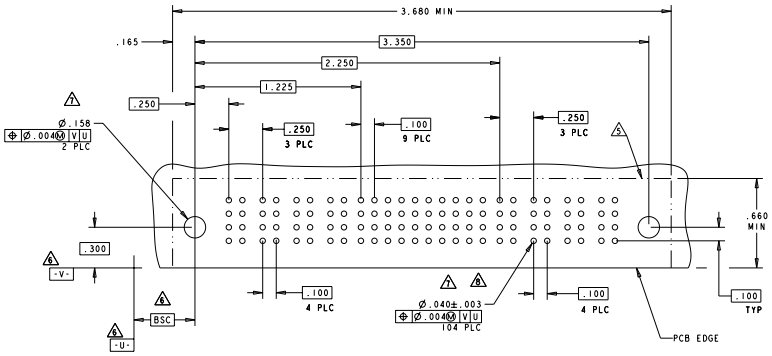

PART NUMBER	HOUSING P/N	ROWS	POWER P1	P2	SIGNAL 1	2	POWER P3	P4
4-6450330-6	4-1450310-5	D C B A	PM	PM	J K N S	J K N S	PM	PM

2P + 8S + 2P

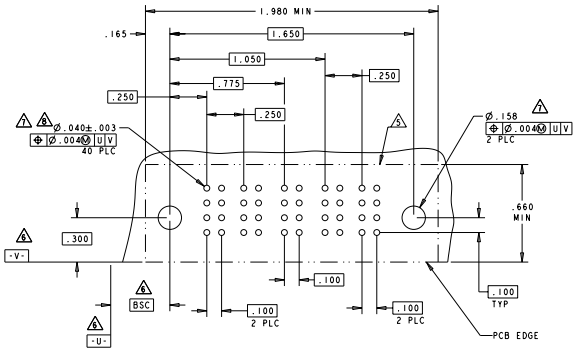

PART NUMBER	ROWS	POWER P1	P2	P3	SIGNAL 1	2	3	4	5	6	POWER P4	P5	P6	P7
2-6450330-8	D C B A	PM	PM	PM	J K N H	J K N S	J K N S	J K N S	J K N S	J K N S	PM	PM	PM	PM

3ACP + 24S + 4P

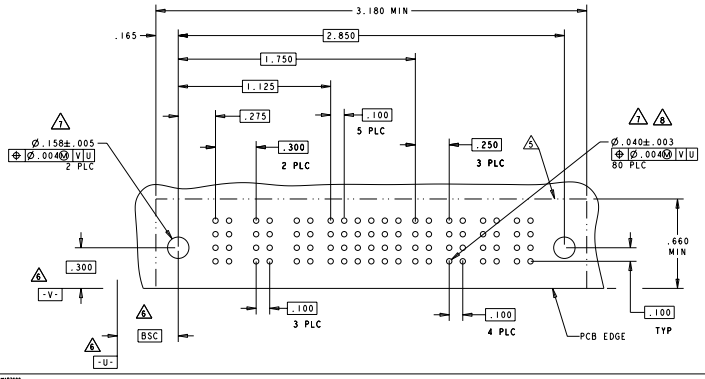

DIMENSIONS: INCHES	TOLERANCES UNLESS OTHERWISE SPECIFIED: 0 PLC ±- 1 PLC ±- 2 PLC ±.01 3 PLC ±.005 4 PLC ±.0025 ANGLES ±2° FINISH -	MATERIAL -

DWN 28FEB05 R.GRZYBOWSKI
CHK 28FEB05 W.PERCHERKE
APD W.PERCHERKE
PRODUCT SPEC 108-1973
APPLICATION SPEC 114-13038
WEIGHT -

Tyco Electronics Corporation
Shanghai,P.R.China.200233

NAME RIGHT ANGLE HEADER ASSEMBLY SOLDER TAILS, W/GUIDES MULTI-BEAM XL

SIZE A1 | CAGE CODE 00779 | DRAWING NO C-6450330 | RESTRICTED TO -

CUSTOMER DRAWING | SCALE 1:1 | SHEET 8 OF 16 | REV NG

AMP 4805 REV 31MAR2000

Downloaded from Elcodis.com electronic components distributor

THIS DRAWING IS UNPUBLISHED. RELEASED FOR PUBLICATION 20
© COPYRIGHT 20 BY TYCO ELECTRONICS CORPORATION. ALL RIGHTS RESERVED.

LOC	DIST
ES	00

REVISIONS

#	LTR	DESCRIPTION	DATE	DRN	APVD
	-	SEE SHEET 1	-	-	-

PART NUMBER	ROWS
3-6450330-9	D C B A
3P + 24S + 3P	

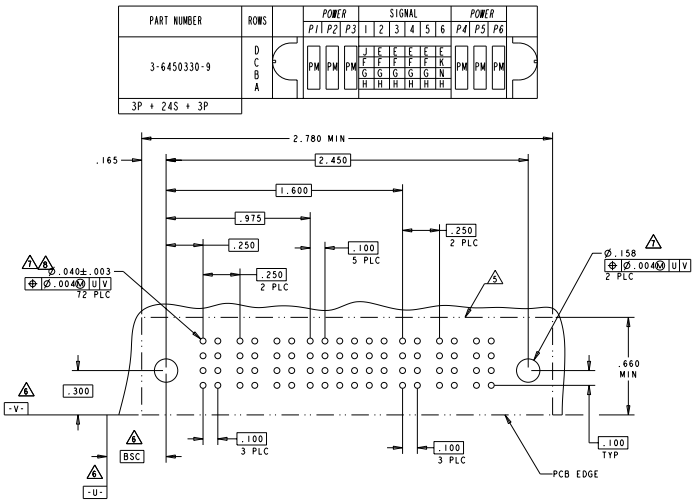

PART NUMBER	ROWS
4-6450330-9	D C B A
2P + 16S + 2P	

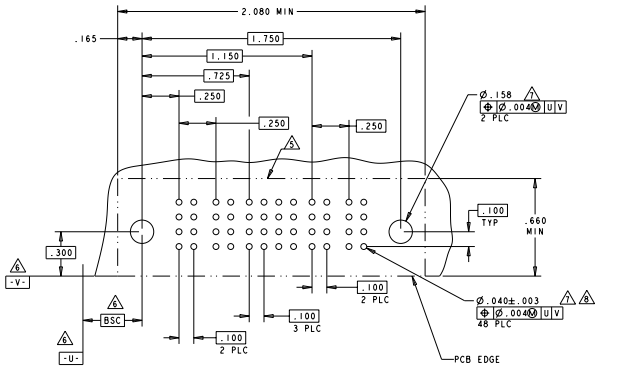

PART NUMBER	ROWS
4-6450330-2	D C B A
4P + 24S + 2P	

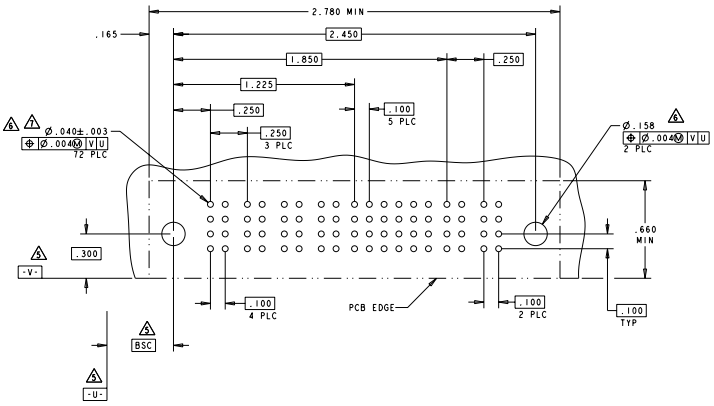

THIS DRAWING IS A CONFIDENTIAL DOCUMENT AND THE INFORMATION CONTAINED HEREIN MAY NOT BE DISCLOSED OR REPRODUCED WITHOUT THE WRITTEN PERMISSION OF TYCO ELECTRONICS CORPORATION.

DIMENSIONS: INCHES

TOLERANCES UNLESS OTHERWISE SPECIFIED:
0 PLC ±-
1 PLC ±-
2 PLC ±0.01
3 PLC ±0.005
4 PLC ±0.0025
ANGLES ±2°

MATERIAL -
FINISH -

DWN 28FEB05 R.GRZYBOWSKI
CHK 28FEB05 W.PERCHERKE
APD W.PERCHERKE
PRODUCT SPEC 108-1973
APPLICATION SPEC 114-13038
WEIGHT -

Tyco Electronics Corporation
Shanghai, P.R.China.200233

NAME RIGHT ANGLE HEADER ASSEMBLY SOLDER TAILS, W/GUIDES MULTI-BEAM XL

SIZE A | CAGE CODE 00779 | DRAWING NO C-6450330 | RESTRICTED TO -

CUSTOMER DRAWING | SCALE 1:1 | SHEET 9 OF 16 | REV N6

AMP 4805 REV 31MAR2000

Downloaded from Elcodis.com electronic components distributor

THIS DRAWING IS UNPUBLISHED. RELEASED FOR PUBLICATION 20
© COPYRIGHT 20 BY TYCO ELECTRONICS CORPORATION. ALL RIGHTS RESERVED.

LOC ES DIST 00

REVISIONS

P	LTR	DESCRIPTION	DATE	DRN	APVD
	-	SEE SHEET 1	-	-	-

PART NUMBER	ROWS	POWER P1	POWER P2	POWER P3	POWER P4	SIGNAL 1	SIGNAL 2	SIGNAL 3	SIGNAL 4	SIGNAL 5	SIGNAL 6	POWER P5	POWER P6	POWER P7
5-6450330-0	D C B A	PM	PM	PM	PM	J K N S	J K N S	J K N S	J K N S	J K N S	J K N H	PM	PM	PM
4P + 24S + 3ACP														

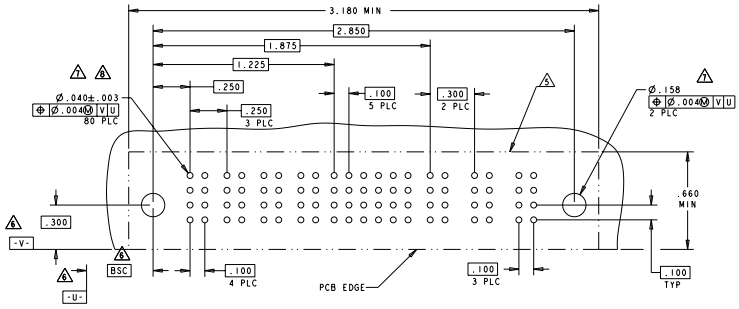

PART NUMBER	ROWS	POWER P1	POWER P2	SIGNAL 1	SIGNAL 2	SIGNAL 3	SIGNAL 4	POWER P3	POWER P4
5-6450330-1	D C B A	PM	PM	J K N S	J K G S	J K N S	E K N S	PM	PM
2P + 16S + 2P									

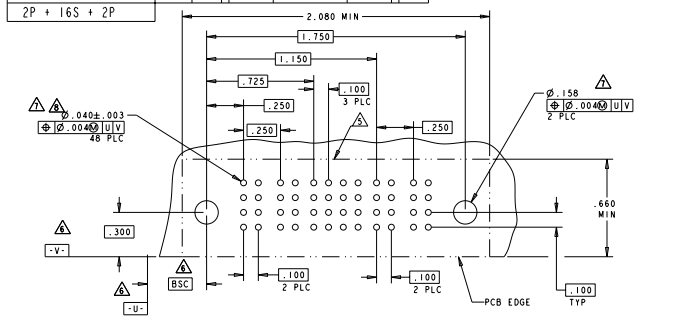

PART NUMBER	ROWS	POWER P1	POWER P2	POWER P3	SIGNAL 1	SIGNAL 2	SIGNAL 3	SIGNAL 4	SIGNAL 5	SIGNAL 6	POWER P4	POWER P5	POWER P6
2-6450330-6	D C B A	PM	PM	PM	J K N S	J K N S	E K N S	J K N S	J K N S	J K N S	PM	PM	PM
3ACP + 24S + 3ACP													

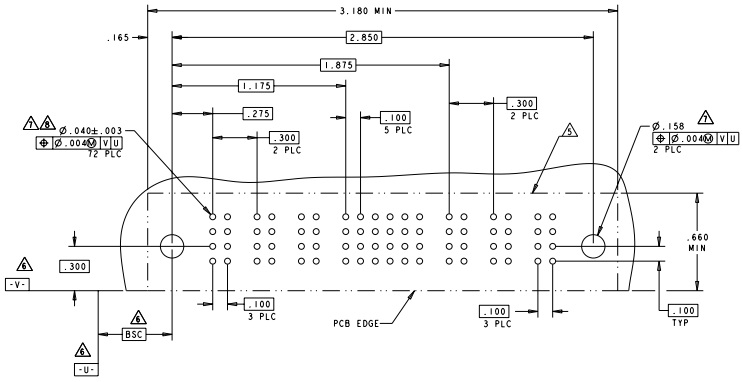

PART NUMBER	ROWS	POWER P1	POWER P2	POWER P3	POWER P4	SIGNAL 1	SIGNAL 2	SIGNAL 3	SIGNAL 4	SIGNAL 5	SIGNAL 6	POWER P5	POWER P6	POWER P7	POWER P8
5-6450330-3	D C B A	PM	PM	PM	PM	J K N S	J K N S	J K N S	J K N S	J K N S	J K N H	PM	PM	PM	PM
4P + 24S + 4P															

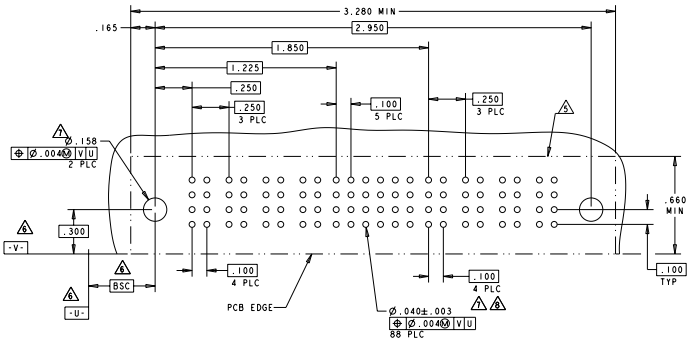

THIS DRAWING IS A CONFIDENTIAL DOCUMENT AND THE INFORMATION CONTAINED HEREIN MAY NOT BE DISCLOSED OR REPRODUCED WITHOUT THE WRITTEN AUTHORITY OF TYCO ELECTRONICS CORPORATION.

DIMENSIONS: INCHES

TOLERANCES UNLESS OTHERWISE SPECIFIED:
0 PLC ±-
1 PLC ±-
2 PLC ±.01
3 PLC ±.005
4 PLC ±.0025
ANGLES ±2°

MATERIAL -
FINISH -

DRN R.GRZYBOWSKI 28FEB05
CHK W.PERCHERKE 28FEB05
APD W.PERCHERKE
PRODUCT SPEC 108-1973
APPLICATION SPEC 114-13038
WEIGHT -

Tyco Electronics Corporation
Shanghai, P.R.China.200233

NAME RIGHT ANGLE HEADER ASSEMBLY SOLDER TAILS, W/GUIDES MULTI-BEAM XL

SIZE A1 CAGE CODE 00779 DRAWING NO C-6450330 RESTRICTED TO -

CUSTOMER DRAWING SCALE 1:1 SHEET 10 OF 16 REV N6

AMP 4805 REV 31MAR2000

Downloaded from Elcodis.com electronic components distributor

THIS DRAWING IS UNPUBLISHED. RELEASED FOR PUBLICATION 20
© COPYRIGHT 20 BY TYCO ELECTRONICS CORPORATION. ALL RIGHTS RESERVED.

LOC	DIST
ES	00

REVISIONS

P	LTR	DESCRIPTION	DATE	DRN	APVD
	-	SEE SHEET 1	-	-	-

PART NUMBER	ROWS
5-6450330-2	D C B A
3P + 24S + 3P	

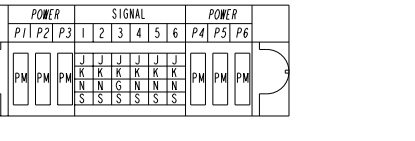

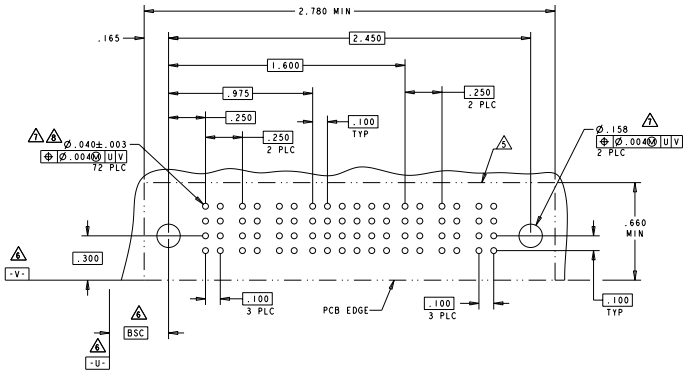

PART NUMBER	ROWS
3-6450330-1	D C B A
16S	

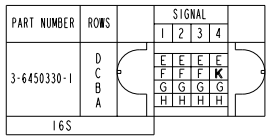

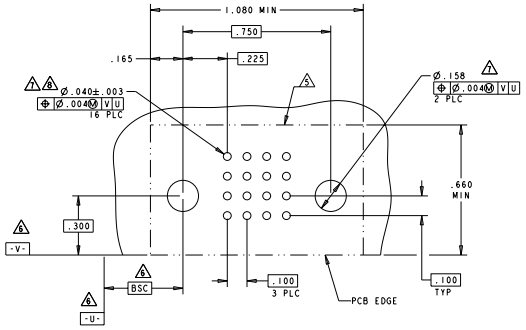

PART NUMBER	ROWS
5-6450330-4	D C B A
7P + 8S + 7P	

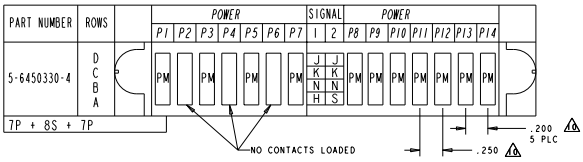

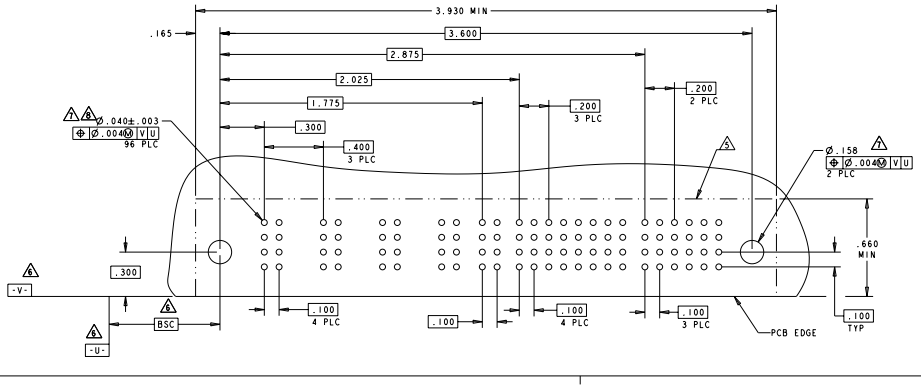

DIMENSIONS: INCHES	TOLERANCES UNLESS OTHERWISE SPECIFIED: 0 PLC ±- / 1 PLC ±- / 2 PLC ±.01 / 3 PLC ±.005 / 4 PLC ±.003 / ANGLES ±2°	MATERIAL - / FINISH -

DRN	28FEB05	Tyco Electronics Corporation Shanghai, P.R.China 200233
CHK	R.GRZYBOWSKI 28FEB05	
APD	W.PERCHERKE	NAME RIGHT ANGLE HEADER ASSEMBLY SOLDER TAILS, W/GUIDES MULTI-BEAM XL
MFG	W.PERCHERKE	
PRODUCT SPEC	108-1973	
APPLICATION SPEC	114-13038	
WEIGHT	-	SIZE A1 / CAGE CODE 00779 / DRAWING NO C-6450330 / RESTRICTED TO -
CUSTOMER DRAWING		SCALE 1:1 / SHEET 11 OF 16 / REV NG

AMP 4805 REV 31MAR2000

Downloaded from Elcodis.com electronic components distributor

THIS DRAWING IS UNPUBLISHED. RELEASED FOR PUBLICATION 20
© COPYRIGHT 20 BY TYCO ELECTRONICS CORPORATION. ALL RIGHTS RESERVED.

LOC	DIST
ES	00

REVISIONS

#	LTR	DESCRIPTION	DATE	DWN	APVD
	-	SEE SHEET 1	-	-	-

PART NUMBER	ROWS	POWER P1	SIGNAL 1	2	3	4	POWER P2
5-6450330-5	D C B A	PM	J K N S	J K N S	J K G S	J K N S	PM
1P + 16S + 1P							

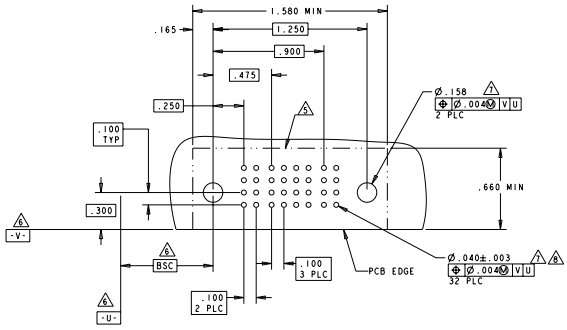

PART NUMBER	ROWS	POWER P1	POWER P2	SIGNAL 1	2	3	4	POWER P3	POWER P4
5-6450330-6	D C B A	PA	PA	A4 A3 A2 A1	A4 A3 A2 A1	A4 A3 A2 A1	Z Y R O	PA	PA
2P + 16S + 2P									

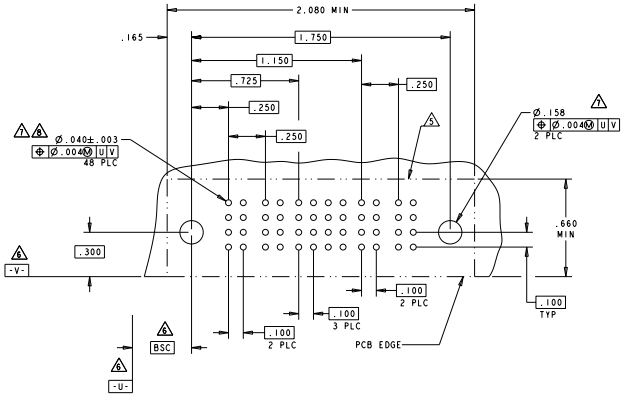

DIMENSIONS: INCHES	TOLERANCES UNLESS OTHERWISE SPECIFIED: 0 PLC ±: 1 PLC ±: 2 PLC ±.01 3 PLC ±.005 4 PLC ±.0020 ANGLES ±2°	DWN R.GRZYBOWSKI 28FEB05 CHK W.PERCHERKE 28FEB05 APD W.PERCHERKE PRODUCT SPEC 108-1973 APPLICATION SPEC 114-13038 WEIGHT -	Tyco Electronics Corporation Shanghai,P.R.China.200233 NAME RIGHT ANGLE HEADER ASSEMBLY SOLDER TAILS, W/GUIDES MULTI-BEAM XL
MATERIAL -	FINISH -	CUSTOMER DRAWING	SIZE A1 CAGE CODE 00779 DRAWING NO C-6450330 RESTRICTED TO - SCALE 1:1 SHEET 12 OF 16 REV NG

AMP 4805 REV 31MAR2000

Downloaded from Elcodis.com electronic components distributor

THIS DRAWING IS UNPUBLISHED. RELEASED FOR PUBLICATION 20
© COPYRIGHT 20 BY TYCO ELECTRONICS CORPORATION. ALL RIGHTS RESERVED.

LOC	DIST
ES	00

REVISIONS

P	LTR	DESCRIPTION	DATE	DRN	APVD
	-	SEE SHEET 1	-	-	-

PART NUMBER	ROWS	POWER P1	POWER P2	SIGNAL 1	2	3	4	5	6	7	8	9	10	11	12	POWER P3	POWER P4
5-6450330-7	D	PM	PM	J	J	E	E	J	E	E	J	E	E	J	J	PM	PM
	C			F	F	K	F	F	F	F	K	F	F	F	F		
	B			N	N	G	G	G	G	G	G	N	G	G	G		
	A			H	H	S	H	H	H	H	S	H	H	H	H		
2P + 48S + 2P																	

N

PART NUMBER	ROWS	POWER P1	POWER P2	POWER P3	POWER P4	POWER P5	POWER P6	SIGNAL 1	2	3	4	5	6	POWER P7	POWER P8	POWER P9	POWER P10	POWER P11	POWER P12
5-6450330-8	D	PM	PM	PM	PM	PM	PM	J	J	E	E	J	J	PM	PM	PM	PM	PM	PM
	C							F	F	K	F	F	F						
	B							N	N	G	G	G	G						
	A							H	H	S	H	H	H						
6ACP + 24S + 6ACP																			

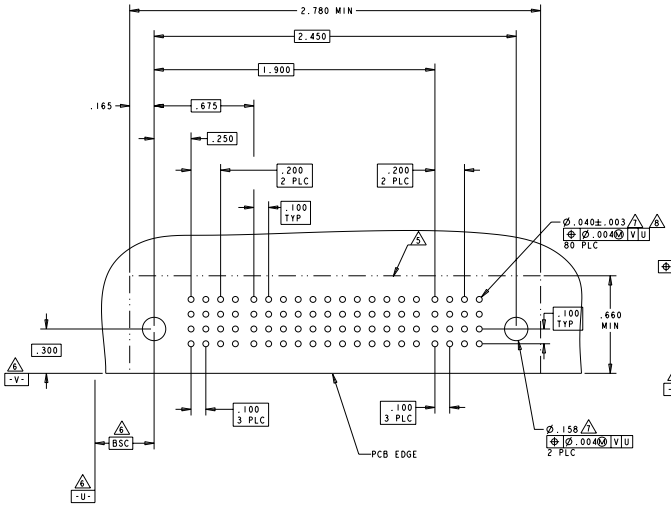

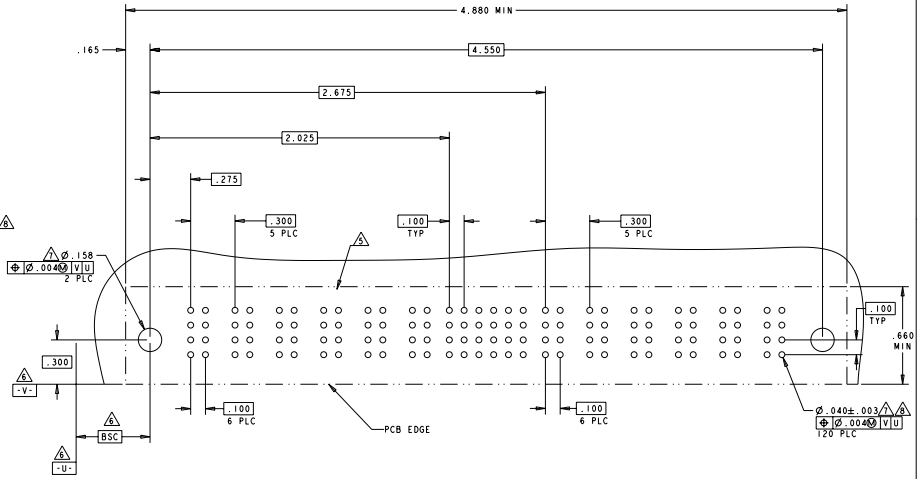

DIMENSIONS: INCHES	TOLERANCES UNLESS OTHERWISE SPECIFIED: 0 PLC ±: 1 PLC ±: 2 PLC ±.01 3 PLC ±.005 4 PLC ±.0020 ANGLES ±2°	MATERIAL: FINISH:

DWN 28FEB05 R.GRZYBOWSKI
CHK 28FEB05 W.PERCHERKE
APD W.PERCHERKE
PRODUCT SPEC 108-1973
APPLICATION SPEC 114-13038
WEIGHT -

Tyco Electronics Corporation
Shangha.P.R.China.200233

NAME RIGHT ANGLE HEADER ASSEMBLY SOLDER TAILS, W/GUIDES MULTI-BEAM XL

SIZE A1 | CAGE CODE 00779 | DRAWING NO C-6450330 | RESTRICTED TO -

CUSTOMER DRAWING | SCALE 1:1 | SHEET 13 OF 16 | REV NG

AMP 4805 REV 31MAR2000

Downloaded from Elcodis.com electronic components distributor

THIS DRAWING IS UNPUBLISHED. RELEASED FOR PUBLICATION 20
© COPYRIGHT 20 BY TYCO ELECTRONICS CORPORATION. ALL RIGHTS RESERVED.

LOC	DIST
ES	00

REVISIONS

P	LTR	DESCRIPTION	DATE	DRN	APVD
	-	SEE SHEET 1	-	-	-

PART NUMBER	ROWS	POWER P1	P2	P3	P4	SIGNAL 1	2	3	4	5	6	POWER P5	P6	P7	P8
3-6450330-7	D C B A	PM	PM	PM	PM	J K N H	J K N S	J K N S	J K N S	J K N S	J K N S	PM	PM	PM	PM
4P + 24S + 4P															

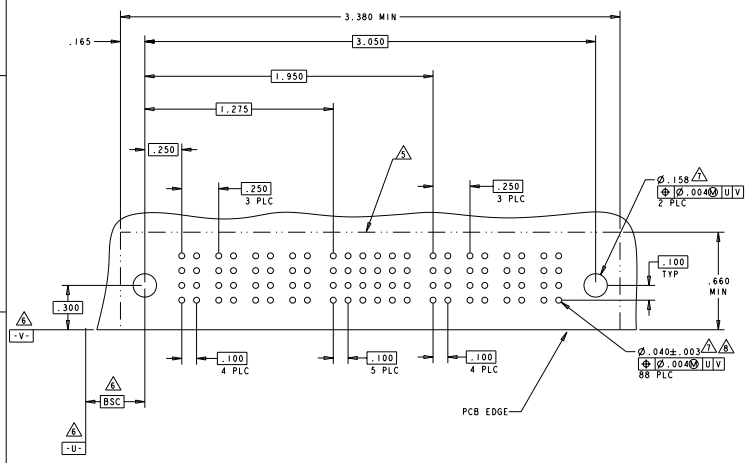

PART NUMBER	ROWS	POWER P1	P2	P3	P4	P5	P6	SIGNAL 1	2	POWER P7	P8
5-6450330-9	D C B A	PM	PM	PM	PM	PM	PM	J K N FS	J K N S	PM	PM
6P + 8S + 2P											

N2

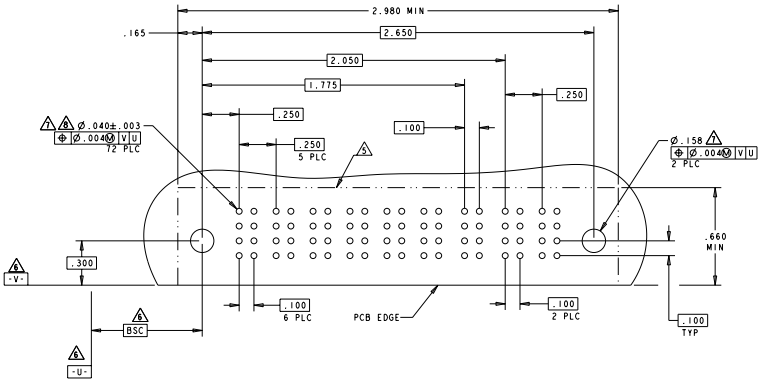

DIMENSIONS: INCHES	TOLERANCES UNLESS OTHERWISE SPECIFIED: 0 PLC ±: 1 PLC ±: 2 PLC ±.01 3 PLC ±.005 4 PLC ±.0025 ANGLES ±2°	MATERIAL :	FINISH :

DWN 28FEB05 R.GRZYBOWSKI
CHK 28FEB05 W.PERCHERKE
APD W.PERCHERKE
PRODUCT SPEC 108-1973
APPLICATION SPEC 114-13038
WEIGHT -

Tyco Electronics Corporation
Shanghai, P.R.China.200233

NAME RIGHT ANGLE HEADER ASSEMBLY SOLDER TAILS, W/GUIDES MULTI-BEAM XL

SIZE A1 | CAGE CODE 00779 | DRAWING NO C-6450330 | RESTRICTED TO -

CUSTOMER DRAWING | SCALE 1:1 | SHEET 14 OF 16 | REV N6

AMP 4805 REV 31MAR2000

Downloaded from Elcodis.com electronic components distributor

THIS DRAWING IS UNPUBLISHED. RELEASED FOR PUBLICATION 20
© COPYRIGHT 20 BY TYCO ELECTRONICS CORPORATION. ALL RIGHTS RESERVED.

LOC	DIST
ES	00

REVISIONS

P	LTR	DESCRIPTION	DATE	DWN	APVD
	-	SEE SHEET 1	-	-	-

PART NUMBER	ROWS
6-6450330-0	D C B A
12P + 48S + 8P	

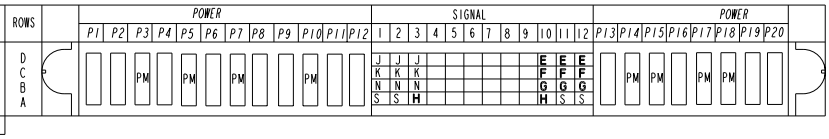

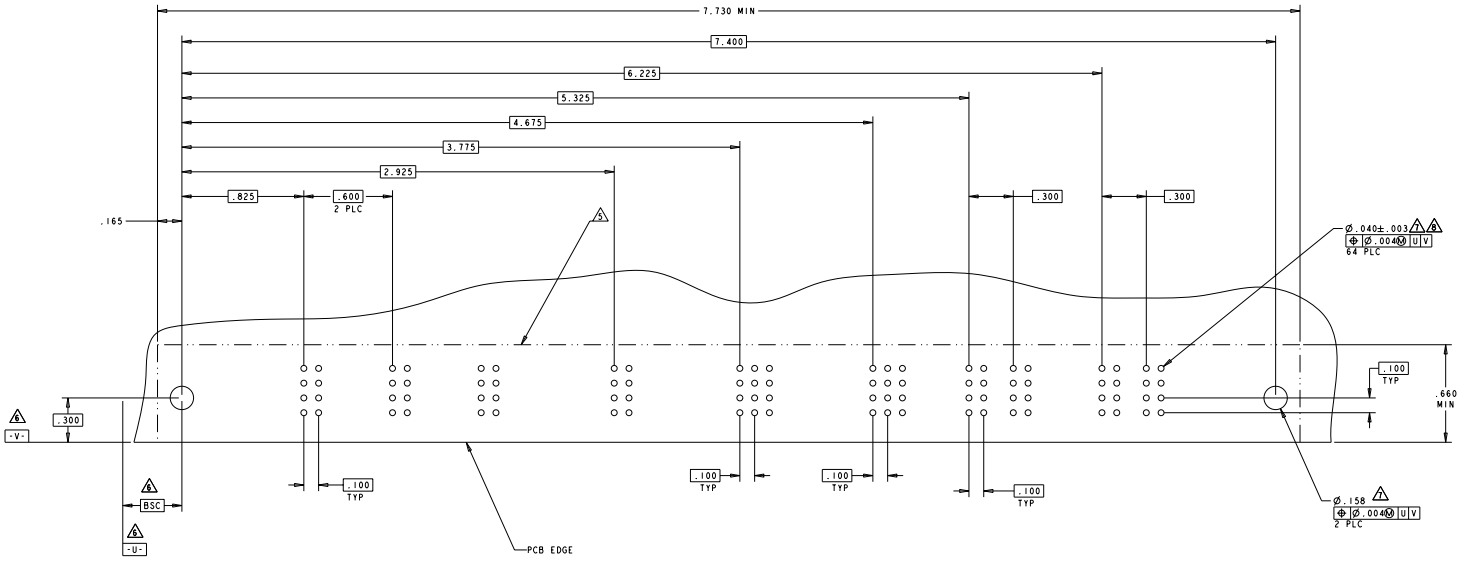

THIS DRAWING IS A CONFIDENTIAL AND PROPRIETARY DOCUMENT OF TYCO ELECTRONICS CORPORATION. ANY REPRODUCTION OR DISCLOSURE TO THIRD PARTIES WITHOUT WRITTEN AUTHORIZATION IS PROHIBITED.

DIMENSIONS: INCHES

TOLERANCES UNLESS OTHERWISE SPECIFIED:
0 PLC ±-
1 PLC ±-
2 PLC ±.01
3 PLC ±.005
4 PLC ±.0025
ANGLES ±2°

MATERIAL -
FINISH -

DWN	28FEB05	R.GRZYBOWSKI
CHK	28FEB05	W.PERCHERKE
APD	-	W.PERCHERKE
PRODUCT SPEC		108-1973
APPLICATION SPEC		114-13038
WEIGHT	-	

Tyco Electronics Corporation
Shanghai,P.R.China,200233

NAME: RIGHT ANGLE HEADER ASSEMBLY SOLDER TAILS, W/GUIDES MULTI-BEAM XL

SIZE	CAGE CODE	DRAWING NO	RESTRICTED TO
A1	00779	C-6450330	-

CUSTOMER DRAWING | SCALE 1:1 | SHEET 15 OF 16 | REV NG

AMP 4805 REV 31MAR2000

Downloaded from Elcodis.com electronic components distributor

THIS DRAWING IS UNPUBLISHED. RELEASED FOR PUBLICATION 20
© COPYRIGHT 20 BY TYCO ELECTRONICS CORPORATION. ALL RIGHTS RESERVED.

LOC	DIST
ES	00

REVISIONS

#	LTR	DESCRIPTION	DATE	DWN	APVD
	-	SEE SHEET 1	-	-	-

PART NUMBER	ROWS	POWER P1	POWER P2	SIGNAL 1	SIGNAL 2	SIGNAL 3	SIGNAL 4	SIGNAL 5	SIGNAL 6	POWER P3	POWER P4	POWER P5	POWER P6
3-6450330-5	D	PM	PM	J	J	J	E	J	J	PM	PM	PM	PM
	C			K	K	K	K	K	K				
	B			N	N	N	G	N	N				
	A			S	S	S	S	S	S				
2P + 24S + 4P													

N6

PART NUMBER	ROWS	POWER P1	POWER P2	POWER P3	SIGNAL 1	SIGNAL 2	SIGNAL 3	SIGNAL 4	POWER P4	POWER P5	POWER P6
6-6450330-1	D	PM	PM	PM	J	J	J	J	PM	PM	PM
	C				K	K	K	F			
	B				G	N	N	N			
	A				S	S	S	S			
3P + 16S + 3P											

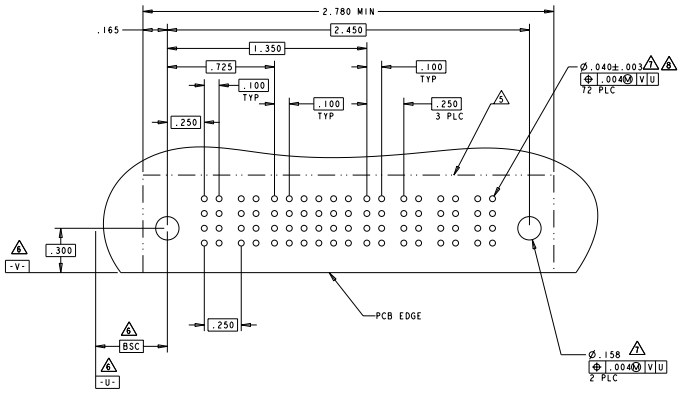

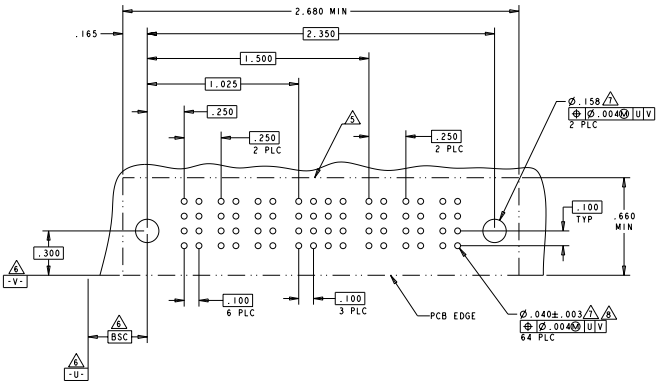

THIS DRAWING IS A CONFIDENTIAL PROPRIETARY DOCUMENT OF TYCO ELECTRONICS CORPORATION. ANY REPRODUCTION OR DISCLOSURE TO THIRD PARTIES WITHOUT WRITTEN PERMISSION IS PROHIBITED.

DIMENSIONS: INCHES

TOLERANCES UNLESS OTHERWISE SPECIFIED:
0 PLC ±-
1 PLC ±-
2 PLC ±.01
3 PLC ±.005
4 PLC ±.0020
ANGLES ±2°

MATERIAL -
FINISH -

DWN 28FEB05 R.GRZYBOWSKI
CHK 28FEB05 W.PERCHERKE
APD W.PERCHERKE
PRODUCT SPEC 108-1973
APPLICATION SPEC 114-13038
WEIGHT -

Tyco Electronics Corporation
Shangha.P.R.China.200233

NAME RIGHT ANGLE HEADER ASSEMBLY SOLDER TAILS, W/GUIDES MULTI-BEAM XL

SIZE A1 | CAGE CODE 00779 | DRAWING NO C-6450330 | RESTRICTED TO -

CUSTOMER DRAWING | SCALE 1:1 | SHEET 16 OF 16 | REV N6

AMP 4805 REV 31MAR2000

Downloaded from Elcodis.com electronic components distributor