THIS DRAWING IS UNPUBLISHED. RELEASED FOR PUBLICATION 20
© COPYRIGHT 20 BY - ALL RIGHTS RESERVED.

LOC	DIST
GP	00

REVISIONS

#	LTR	DESCRIPTION	DATE	DRN	APVD
	A2	REVISED PER ECO-11-004587	11MAR2011	RK	HMR

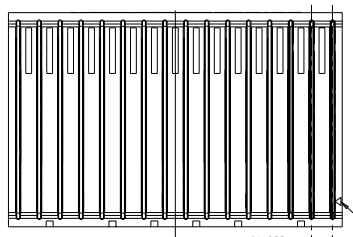

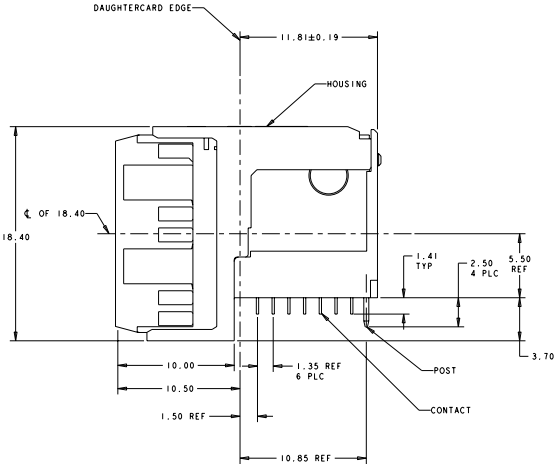

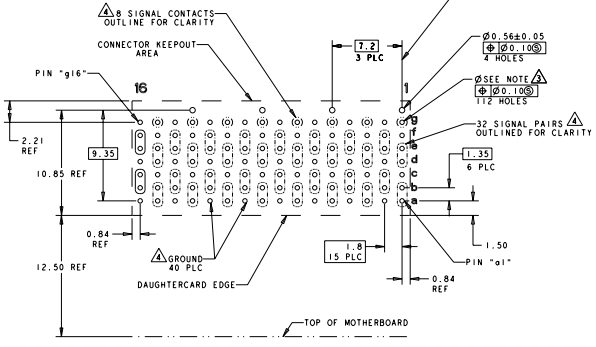

PC BOARD LAYOUT
(CONNECTOR SIDE)
SCALE 5:1

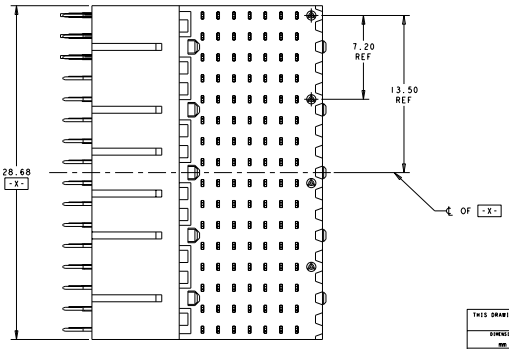

1. HOUSING: LCP, UL94V0, COLOR: BLACK.
CONTACT: PHOSPHOR BRONZE.
POST: BRASS WIRE.

2. CONTACT: 0.76µm MIN GOLD IN PAD CONTACT AREA
1.27µm MIN TIN-LEAD ON PCB TAIL
OVER 1.27µm MIN NICKEL OVER ALL.
POST 1.27µm MIN NICKEL PLATED.

3. MANUFACTURING TOLERANCE FOR Ø0.46± 0.05
DIAMETER FINISHED HOLE WITH Sn /PB PLATING:

DRILLED HOLE = Ø0.55±0.02
COPPER PLATING = 0.025-0.050
Sn PB PLATING = 0.0038-0.0124

OR

MANUFACTURING TOLERANCE FOR Ø0.475± 0.05
DIAMETER FINISHED HOLE WITHOUT Sn /PB PLATING:

DRILLED HOLE = Ø0.55±0.02
COPPER PLATING = 0.025-0.050

4. SEE TABLE I FOR INTERCONNECTIONS TO
BACKPLANE CONNECTOR.

5. CONTACT: 0.76µm MIN GOLD IN PAD CONTACT AREA
1.27µm MIN TIN ON PCB TAIL
OVER 1.27µm MIN NICKEL OVER ALL.
POST 1.27µm MIN NICKEL PLATED.

6. CONTACT: 1.27µm MIN GOLD IN PAD CONTACT AREA
1.27µm MIN TIN-LEAD ON PCB TAIL
OVER 1.27µm MIN NICKEL OVER ALL.
POST 1.27µm MIN NICKEL PLATED.

TABLE I
INTERCONNECTIONS WITH BACKPLANE CONNECTOR 1410140

TYPICAL INTERCONNECTIONS FOR EACH EVEN-NUMBERED COLUMN (WAFER): 2,4,6,8,10,12,14,16		
CONTACT USAGE	DAUGHTERCARD CONNECTOR PIN	BACKPLANE CONNECTOR PIN
SIGNAL PAIR	bx	cx
	cx	dx
SIGNAL PAIR	ex	gx
	fx	hx
GROUNDS	ax,dx,gx, (ALL COMMONED)	ax,bx,cx, fx, ix

TYPICAL INTERCONNECTIONS FOR EACH ODD-NUMBERED COLUMN (WAFER): 1,3,5,7,9,11,13,15		
CONTACT USAGE	DAUGHTERCARD CONNECTOR PIN	BACKPLANE CONNECTOR PIN
SIGNAL PAIR	ax	ax
	bx	bx
SIGNAL PAIR	dx	ex
	ex	fx
SIGNAL	gx	ix
GROUNDS	cx,fx (ALL COMMONED)	cx,dx,gx,hx

NOTE: "x" DESIGNATES THE COLUMN NUMBER

PLATING	PART NO
6	1410187-3
5	1410187-2
2	1410187-1

THIS DRAWING IS A CONTROLLED DOCUMENT.

DIMENSIONS: mm

TOLERANCES UNLESS OTHERWISE SPECIFIED:
0 PLC ±-
1 PLC ±0.5
2 PLC ±0.13
3 PLC ±-
4 PLC ±-
ANGLES ±1°±-

MATERIAL 1

FINISH 2

DRN	R. TREA	14NOV2002
CHK	J. CONSOLI	18NOV2002
APPR	G. GRIFFITH	14MAR2006
PRODUCT SPEC	108-2072	
APPLICATION SPEC	114-13056	
WEIGHT	-	

TE Connectivity

NAME: RIGHT-ANGLE PLUG ASSEMBLY, 7 ROW, CENTER, 20.3mm, MultiGig RT2, DAUGHTERCARD CONNECTOR, DIFFERENTIAL

SIZE	CAGE CODE	DRAWING NO	RESTRICTED TO
A1	00779	C-1410187	-

CUSTOMER DRAWING

SCALE 6:1 SHEET 1 OF 1 REV A2

4005 13JUL10

PRELIMINARY DRAWING

Downloaded from Elcodis.com electronic components distributor