THIS DRAWING IS UNPUBLISHED. RELEASED FOR PUBLICATION 20
© COPYRIGHT 20 BY TYCO ELECTRONICS CORPORATION. ALL RIGHTS RESERVED.

LOC	DIST
GP	00

REVISIONS

#	LTR	DESCRIPTION	DATE	DRN	APVD
	B	RELEASED	18DEC2006	RT	GG
	C	PER ECO-08-023229	17SEP2008	RT	GG

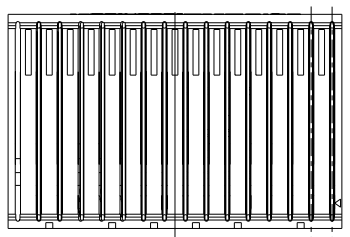

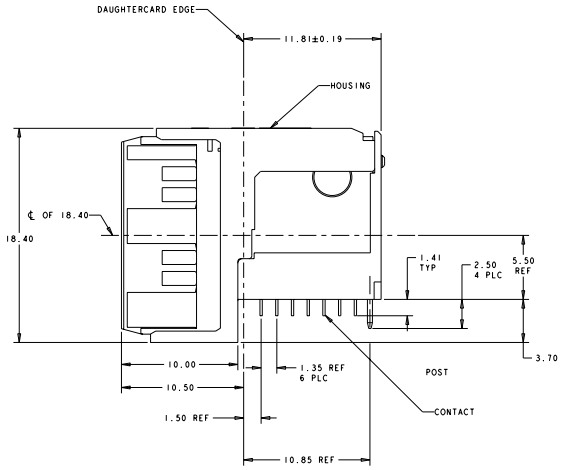

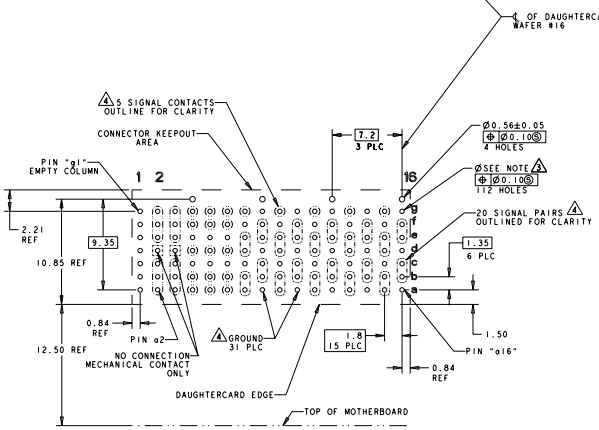

PC BOARD LAYOUT
(CONNECTOR SIDE)
SCALE 5:1

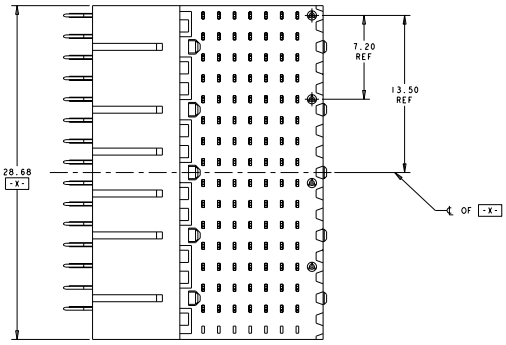

1. HOUSING: LCP, UL94V0, COLOR: BLACK.
CONTACT: PHOSPHOR BRONZE.
POST: BRASS WIRE.

2. CONTACT: 1.27µm MIN GOLD IN PAD CONTACT AREA
1.27µm MIN TIN-LEAD ON PCB TAIL
OVER 1.27µm MIN NICKEL OVER ALL.
POST 1.27µm MIN NICKEL PLATED.

3. MANUFACTURING TOLERANCE FOR Ø0.46± 0.05
DIAMETER FINISHED HOLE WITH Sn /PB PLATING:

DRILLED HOLE = Ø0.55±0.02
COPPER PLATING = 0.025-0.050
Sn PB PLATING = 0.0038-0.0124

OR

MANUFACTURING TOLERANCE FOR Ø0.475± 0.05
DIAMETER FINISHED HOLE WITHOUT Sn /PB PLATING:

DRILLED HOLE = Ø0.55±0.02
COPPER PLATING = 0.025-0.050

4. SEE TABLE I FOR INTERCONNECTIONS TO
BACKPLANE CONNECTOR.

TABLE I
INTERCONNECTIONS WITH BACKPLANE CONNECTOR 1410964-1 OR 1410965-1

TYPICAL INTERCONNECTIONS FOR EACH COLUMN (WAFER): 2, 3		
CONTACT USAGE	DAUGHTERCARD CONNECTOR PIN	BACKPLANE CONNECTOR PIN
POWER	ax,bx,cx	ax,bx,cx,dx
POWER	ex,fx,gx	fx,gx,hx,ix
NOT CONNECTED	dx	ex

TYPICAL INTERCONNECTIONS FOR EACH COLUMN (WAFER): 4, 5, 6		
CONTACT USAGE	DAUGHTERCARD CONNECTOR PIN	BACKPLANE CONNECTOR PIN
SIGNAL	ax	bx
SIGNAL	bx	cx
SIGNAL	dx	ex
SIGNAL	fx	gx
SIGNAL	gx	hx
GROUNDS	cx,ex, (ALL COMMONED)	ax, dx, fx, ix

TYPICAL INTERCONNECTIONS FOR EACH ODD-NUMBERED COLUMN (WAFER): 7, 9, 11, 13, 15		
CONTACT USAGE	DAUGHTERCARD CONNECTOR PIN	BACKPLANE CONNECTOR PIN
SIGNAL PAIR	ax	ax
	bx	bx
SIGNAL PAIR	dx	ex
	ex	fx
SIGNAL	gx	ix
GROUNDS	cx,fx (ALL COMMONED)	cx,dx,gx,hx

TYPICAL INTERCONNECTIONS FOR EACH EVEN-NUMBERED COLUMN (WAFER): 8, 10, 12, 14, 16		
CONTACT USAGE	DAUGHTERCARD CONNECTOR PIN	BACKPLANE CONNECTOR PIN
SIGNAL PAIR	bx	cx
	cx	dx
SIGNAL PAIR	ex	gx
	fx	hx
GROUNDS	ax,dx,gx, (ALL COMMONED)	ax,bx,ex, fx, ix

NOTE: "x" DESIGNATES THE COLUMN NUMBER

2	1410968-3
PLATING	PART NO

DRN R. TREA 17FEB2006
CHK G.GRIFFITH 17FEB2006
APVD 17FEB2006

Tyco Electronics
Harrisburg, PA 17105-3608

DIMENSIONS: mm
TOLERANCES UNLESS OTHERWISE SPECIFIED:
0 PLC ±-
1 PLC ±0.5
2 PLC ±0.13
3 PLC ±-
4 PLC ±-
ANGLES ±0°
FINISH 2
MATERIAL 1

NAME RIGHT-ANGLE PLUG ASSEMBLY, 7 ROW, CENTER, 20.3mm, MultiGig RT2. DAUGHTERCARD CONNECTOR, COMBO

PRODUCT SPEC 108-2072
APPLICATION SPEC 114-13056
WEIGHT -
SIZE A1 CAGE CODE 00779 DRAWING NO C-1410968
RESTRICTED TO -
CUSTOMER DRAWING
SCALE 6:1 SHEET 1 OF 1 REV C

AMP 4805 REV 31MAR2000
PrvrENGINEER DRAWING

Downloaded from Elcodis.com electronic components distributor