THIS DRAWING IS UNPUBLISHED. RELEASED FOR PUBLICATION -.-.-
© COPYRIGHT - By -. ALL RIGHTS RESERVED.

UOC	DIST
AD	00

REVISIONS

P	LTR	DESCRIPTION	DATE	DRN	APVD
	P	REVISED PER ECO-11-004835	11MAR11	RK	HMR

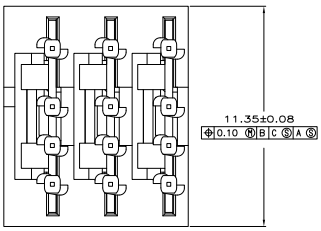

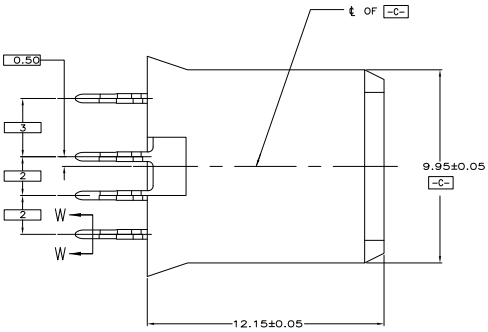

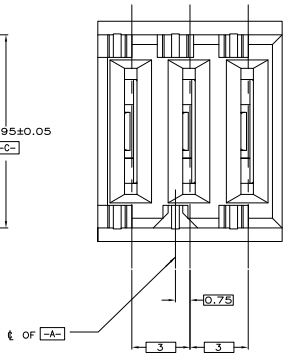

1. MATERIAL: HOUSING: POLYESTER. COLOR: GRAY. 94V-O.
   CONTACT: PHOSPHOR BRONZE.
2. FINISH: CONTACT MATING AREA: 1.27μm MIN GOLD OR 0.08μm MIN GOLD OVER 0.76μm MIN PALLADIUM-NICKEL.
   ACTION PIN AREA: 0.5μm MIN TIN PLATE,
   ALL OVER 1.27μm MIN NICKEL UNDERPLATE.
3. FINISH: CONTACT LUBRICATION WITH BELLCORE APPROVED LUBRICANT. TECHNICAL REFERENCE: TR-NWT-001217 ISSUE 1, SEPT 1992.
4. TOLERANCE TO BE ±0.28 AFTER CONNECTOR IS APPLIED TO P.C. BOARD.
5. RESTRICTED PART NUMBER, CONTACT ENGINEERING.
6. MATERIAL: HOUSING: POLYESTER. COLOR: GRAY. 94V-O.
   CONTACT: HIGH CURRENT COPPER ALLOY
7. REFERENCE APPLICATION SPEC 114-1103 FOR RECOMMENDED PLATED THRU HOLE DIAMETER AND PLATING THICKNESS.
8. CURRENT RATING 10A/CONTACT FOR PHOS BRONZE CONTACTS AND 16A/CONTACT FOR HIGH CURRENT COPPER ALLOY CONTACTS PER PRODUCT SPEC 108-1651.

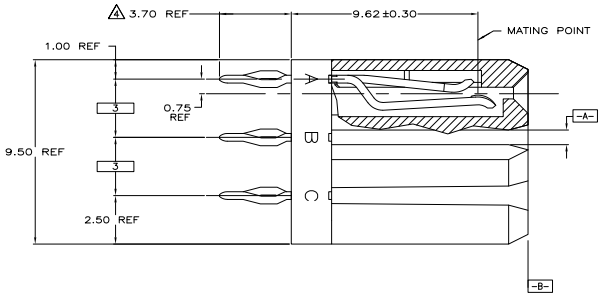

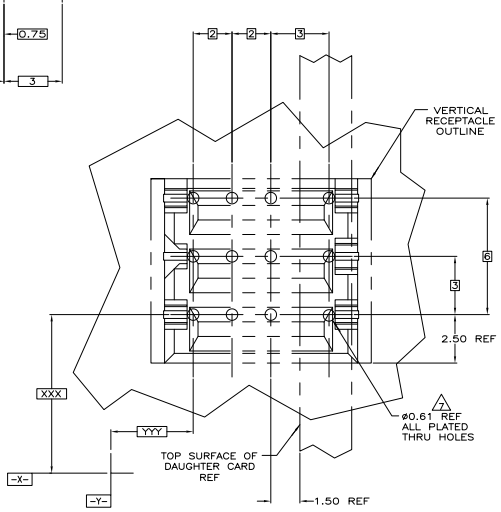

RECOMMENDED PCB HOLE LAYOUT

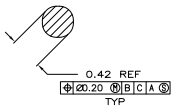

SECTION W-W
SCALE 40:1

2 3 6	5-5223955-2
1 2 3 5	5223955-8
1 2 3	5223955-2
MATERIAL & FINISH	PART NUMBER

THIS DRAWING IS A CONTROLLED DOCUMENT.

DIMENSIONS: mm

TOLERANCE UNLESS OTHERWISE SPECIFIED:
0 PLC ± –
1 PLC ± –
2 PLC ± 0.13
3 PLC ± –
4 PLC ± –
ANGLES ± –

MATERIAL: SEE TABLE
FINISH: SEE TABLE

DRN B.CARBO 10DEC04
CHK R.PATTERSON 10DEC04
APVD R.PATTERSON 10DEC04
PRODUCT SPEC –
APPLICATION SPEC –
WEIGHT –

TE Connectivity

NAME: ASSEMBLY, VERTICAL RECEPTACLE, UNIVERSAL POWER MODULE

SIZE A1 CAGE CODE 00779 DRAWING NO C-5223955 RESTRICTED TO –

CUSTOMER DRAWING SCALE 10:1 SHEET 1 OF 1 REV P

408G (3/11)

Downloaded from Elcodis.com electronic components distributor