THIS DRAWING IS UNPUBLISHED. RELEASED FOR PUBLICATION
© COPYRIGHT BY TYCO ELECTRONICS CORPORATION. ALL RIGHTS RESERVED.

UOC	DIST
AD	00

REVISIONS

P	LTR	DESCRIPTION	DATE	DRN	APVD
	A1	REVISED PER ECO-07-011826	20JUN07	DH	JE
	A2	REVISED PER ECO-10-020444	02NOV09	KK	AEG
	B	ECR-10-018652	10SEP10	JS	MOW

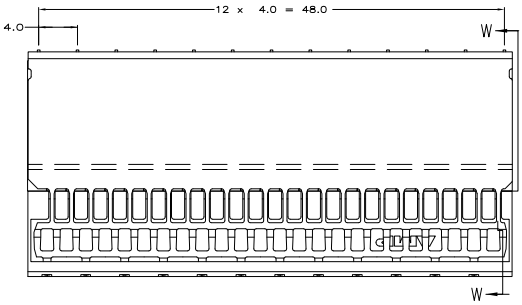

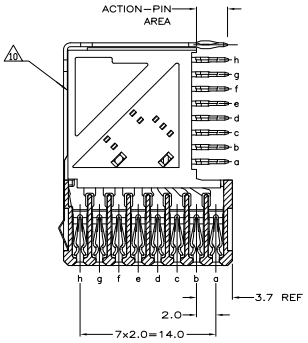

SECTION W-W

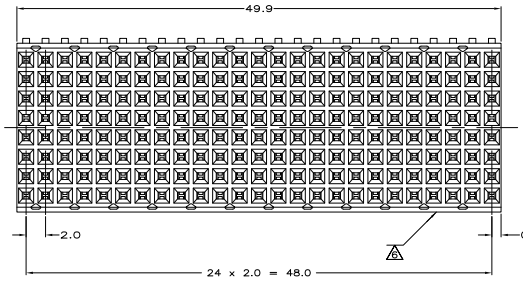

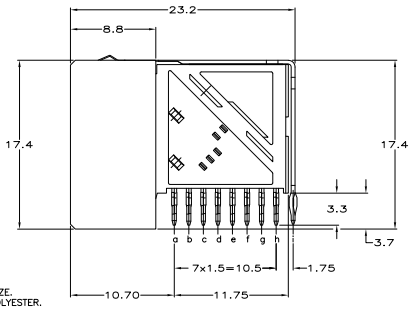

1. MATERIAL:
   CONTACT: PHOSPHOR BRONZE.
   HOUSING: GLASS-FILLED POLYESTER.
2. GENERAL PLATING SPECIFICATION: UNDERPLATING (ENTIRE CONTACT): 1.27µm MIN NICKEL AND ACTION PIN: 0.5µm MIN TIN.
   FOR PLATING OF MATING SURFACES SEE APPLICABLE SPECIFICATION REFERENCE FOR EACH DASH NUMBER.
3. CONFORMS TO ALL TESTING ACCORDING TO IEC 61076-4-101 PERFORMANCE LEVEL 2.
4. CONNECTOR TESTED AND QUALIFIED AGAINST TELCORDIA GR-1217-CORE QUALITY LEVEL 3, CENTRAL OFFICE APPLICATIONS.
5. CONNECTOR TESTED AND QUALIFIED AGAINST TELCORDIA GR-1217-CORE QUALITY LEVEL 3, UNCONTROLLED ENVIROMENT APPLICATIONS.
6. CONNECTOR MARKED WITH PART NUMBER AND DATE CODE. ADDITIONAL CHARACTERS OR MARKINGS, AS WELL AS THE LOCATION OF THE MARKINGS, MAY BE ADDED FOR TRACEABILITY BASED UPON MANUFACTURERS DISCRETION.
7. PLATED-THROUGH HOLES AT 2x1.5mm GRID 200 TOTAL HOLES.
8. ROW "i" 13 PLATED THROUGH HOLES FOR UPPERSHIELD.
9. CONNECTOR & SHIELD LUBRICATED WITH BELCORE APPROVED LUBRICANT, TECHNICAL REFERENCE: TR-NWT-001217 ISSUE 1, SEP 1992.
10. SHIELD MOUNTED ON CONNECTOR WITH DOUBLE SIDED ADHESIVE TAPE OR ADHESIVE.
11. OBSOLETE PARTS: OBSOLETE CIS STREAMLINING PER D.RENAUD/D.SINISI

PCB HOLE DIMENSIONS

DRILLED HOLE	±0.7		±0.025 mm
FIN. HOLE	±0.55	TO	0.65 mm
Cu-thks	±0.025	TO	0.050 mm
SnPb-thks	±0.004	TO	0.010 mm

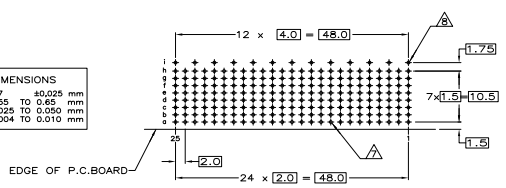

RECOMMENDED PCB HOLE LAYOUT
COMPONENT SIDE
SCALE 2.5:1

11 OBSOLETE		
	2 5 9	~~1-5646487-9~~
	2 4 9	5646487-9
	2 3	5646487-1
	FINISH	PART NUMBER

THIS DRAWING IS A CONTROLLED DOCUMENT.

DIMENSIONS: mm

TOLERANCE UNLESS OTHERWISE SPECIFIED: ±0.2

MATERIAL: 1

FINISH: SEE TABLE

TITLE: B.CARBO 20JUL05
DR: G.SKIPPER 20JUL05
APD: G.SKIPPER 20JUL05
PRODUCT SPEC: –
APPLICATION SPEC: –
WEIGHT: –

Tyco Electronics Corporation
Harrisburg, PA 17105-3608

NAME: R/A RECEPTACLE ASSY, 200 POSN Z-PACK 2mm HM, TYPE E W/GROUND RETURN SHIELD

SIZE: A1 CAGE CODE: 00779 DRAWING NO: C-5646487 RESTRICTED TO: –

CUSTOMER DRAWING SCALE: 5:1 SHEET 1 OF 1 REV B

AMP 4805 REV 31MM2000

20JUN2007 US077239

Downloaded from Elcodis.com electronic components distributor