THIS DRAWING IS UNPUBLISHED. RELEASED FOR PUBLICATION – .– .
© COPYRIGHT – BY TYCO ELECTRONICS CORPORATION. ALL INTERNATIONAL RIGHTS RESERVED.

LOC	DIST
H	—

REVISIONS

P	LTR	DESCRIPTION	DATE	DWN	APVD
	F	EH–0186–94	23–03–94	RVL	—
	G	ECR–07–020965	26–08–08	AEG	MKO

NOTES:

1. ACTION–PIN AREA SUITABLE FOR P.C.B.–THICKNESS 1,6 mm.
2. 8 KEYING HOLES SUITABLE FOR KEYING PIN P.N.215916–1
3. KEYING HOLES CAN BE DRILLED BY CUSTOMER.

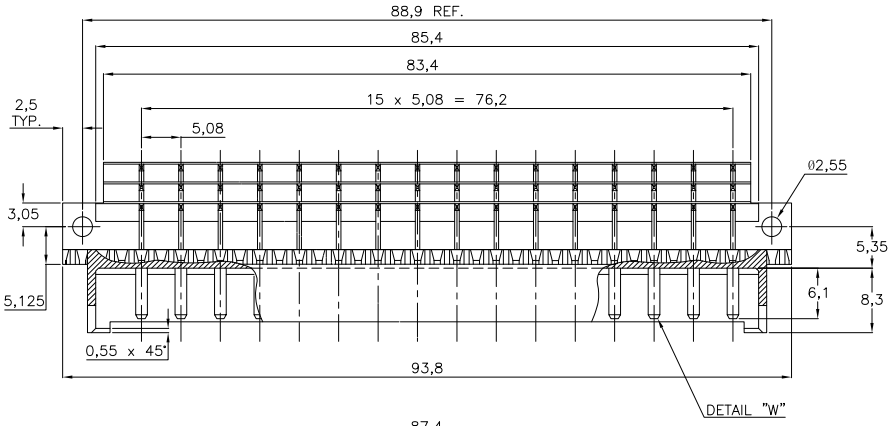

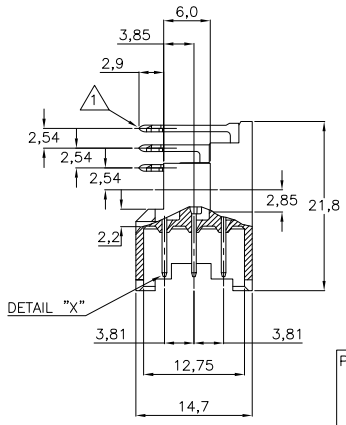

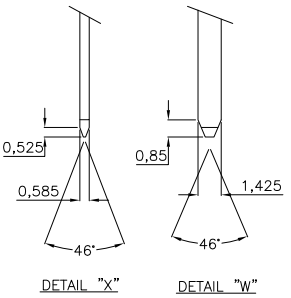

P.C.B. HOLE DIM. ACTION PIN

DRILLED HOLE	: 1,15 ± 0,025 mm
FIN. HOLE	: 0,94 to 1,09 mm
AFTER REFLOW	: 0,91 to 1,09 mm
Cu–thks	: 0,025 to 0,075 mm
SnPb–thks	: 0,004 to 0,010 mm

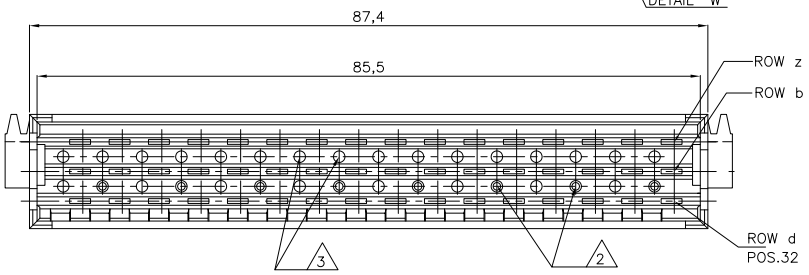

OBSOLETE	SAME AS –1 ONLY 0,8µm AU.		215435–4
	AT CONT.AREA:1,25µm Ni OVER 1,25µm Ni AT POST AREA: 2,5µm Sn OVER 1,25µm Ni	HOUSING:GLASSFILLED POLYESTER(GREY) CONTACTS: PHOSPHORBRONZE	215435–1
	FINISH	MATERIAL	PN

CONTACT No.		2	4	6	8	10	12	14	16	18	20	22	24	26	28	30	32
F 48 ROW	z	x	x	x	x	x	x	x	x	x	x	x	x	x	x	x	x
	b	x	x	x	x	x	x	x	x	x	x	x	x	x	x	x	x
	d	x	x	x	x	x	x	x	x	x	x	x	x	x	x	x	x

AN ASTERISK „X" DENOTES A CONTACT.

THIS DRAWING IS A CONTROLLED DOCUMENT.

DIMENSIONS: mm

TOLERANCES UNLESS OTHERWISE SPECIFIED:

0 PLC	± –
1 PLC	± –
2 PLC	± –
3 PLC	± –
4 PLC	± –
ANGLES	± –

MATERIAL –

FINISH –

DWN	R.V.LOKVEN 03JUN86
CHK	J.GRUNSVEN 24JUN86
APVD	L.V.SOEST 10JUL86
PRODUCT SPEC	—
APPLICATION SPEC	—
WEIGHT	—

Tyco Electronics

Tyco Electronics Corporation
's–Hertogenbosch, Nederland

NAME
48 POS. DIN 41612 F MALE
90° ACTION PIN CONNECTOR

SIZE	CAGE CODE	DRAWING NO	RESTRICTED TO
A3	00779	C–215435	—

CUSTOMER DRAWING | SCALE NTS | SHEET 1 OF 1 | REV G

1470–19 (1/08)

Downloaded from Elcodis.com electronic components distributor