RBO40-40G/T

Application Specific Discretes
A.S.D.™

REVERSED BATTERY AND OVERVOLTAGE PROTECTION

FEATURES

- PROTECTION AGAINST “LOAD DUMP” PULSE
- 40A DIODE TO GUARD AGAINST BATTERY REVERSAL
- MONOLITHIC STRUCTURE FOR GREATER RELIABILITY
- BREAKDOWN VOLTAGE : 24 V min.
- CLAMPING VOLTAGE : ± 40 V max.
- COMPLIANT WITH ISO / DTR 7637

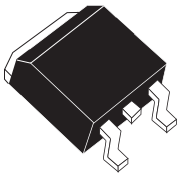

D^{2}PAK
RBO40-40G

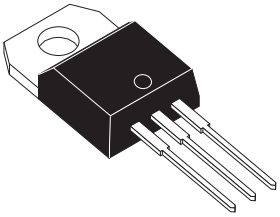

TO220-AB
RBO40-40T

DESCRIPTION

Designed to protect against battery reversal and load dump overvoltages in automotive applications, this monolithic component offers multiple functions in the same package :
D1 : reversed battery protection
T1 : clamping against negative overvoltages
T2 : Transil function against “load dump” effect.

FUNCTIONAL DIAGRAM

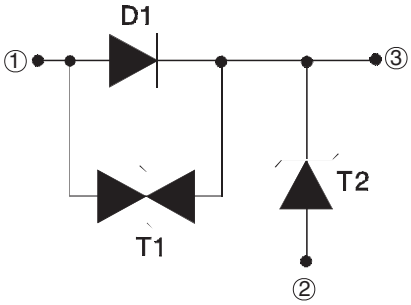

TM : TRANSIL and ASD are trademarks of STMicroelectronics.

Downloaded from Elcodis.com electronic components distributor

ABSOLUTE MAXIMUM RATINGS

Symbol	Parameter		Value	Unit
I_{FSM}	Non repetitive surge peak forward current (Diode D1)	tp = 10 ms	120	A
I_F	DC forward current (Diode D1)	Tc = 75°C	40	A
V_{PP}	Peak load dump voltage (see note 1and 2) 5 pulses (1 minute between each pulse)		80	V
P_{PP}	Peak pulse power between Input and Output (Transil T1) Tj initial = 25°C	10/1000 µs	1500	W
T_{stg}/T_j	Storage and operating junction temperature range		- 40 to + 150	°C
T_L	Maximum lead temperature for soldering during 10 s at 4.5mm from case for TO220-AB		260	°C

Note 1 : for a surge greater than the maximum value, the device will fail in short-circuit.
Note 2 : see Load Dump curves.

THERMAL RESISTANCE

Symbol	Parameter		Value	Unit
Rth (j-c)	Junction to case	RBO40-40G RBO40-40T	1.0 1.0	°C/W
Rth (j-a)	Junction to ambient	RBO40-40T	60	°C/W

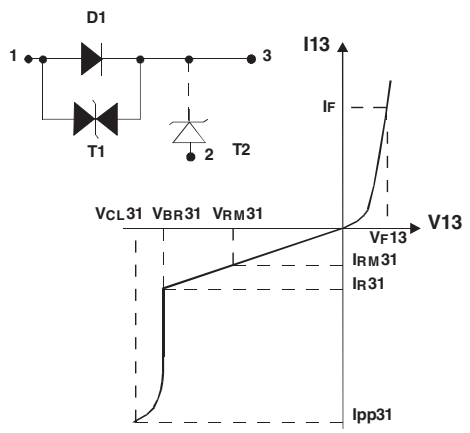

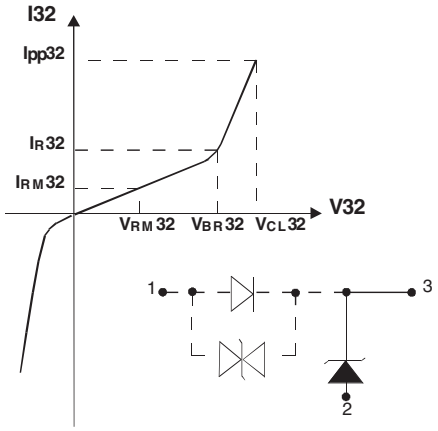

Ex :V_F 13 . between Pin 1 and Pin 3 V_{BR} 32 . between Pin 3 and Pin 2

Downloaded from Elcodis.com electronic components distributor

Symbol	Parameter
V_{RM31}/V_{RM32}	Stand-off voltage Transil T1 / Transil T2.
V_{BR31}/V_{BR32}	Breakdown voltage Transil T1 / Transil T2.
I_{R31}/I_{R32}	Leakage current Transil T1 / Transil T2.
V_{CL31}/V_{CL32}	Clamping voltage Transil T1 / Transil T2.
V_{F13}	Forward voltage drop Diode D1.
I_{PP}	Peak pulse current.
αT	Temperature coefficient of V_{BR}.
C_{31}/C_{32}	Capacitance Transil T1 / Transil T2.
C_{13}	Capacitance of Diode D1

ELECTRICAL CHARACTERISTICS : DIODE D1 (- 40°C < T_{amb} < + 85°C)

Symbol	Test Conditions	Value			Unit
		Min.	Typ.	Max.	
$V_{F\,13}$	I_F = 40 A			1.9	V
$V_{F\,13}$	I_F = 20A			1.45	V
$V_{F\,13}$	I_F = 1 A			1	V
$V_{F\,13}$	I_F = 100 mA			0.95	V
C_{13}	F = 1MHz V_R= 0 V		3000		pF

ELECTRICAL CHARACTERISTICS : TRANSIL T1 (- 40°C < T_{amb} < + 85°C)

Symbol	Test Conditions		Value			Unit
			Min.	Typ.	Max.	
$V_{BR\,31}$	I_R = 1 mA		22		35	V
$V_{BR\,31}$	I_R = 1 mA, T_{amb} = 25°C		24		32	V
$I_{RM\,31}$	V_{RM} = 20 V				100	µA
$I_{RM\,31}$	V_{RM} = 20 V, T_{amb} = 25°C				10	µA
$V_{CL\,31}$	I_{PP} = 37.5A, Tj initial = 25°C	10/1000µs			40	V
α T	Temperature coefficient of V_{BR}				9	10^{-4}/°C
C 31	F = 1MHz V_R = 0 V			3000		pF

ELECTRICAL CHARACTERISTICS : TRANSIL T2 (- 40°C < T_{amb} < + 85°C)

Symbol	Test Conditions	Value			Unit
		Min.	Typ.	Max.	
$V_{BR\,32}$	I_R = 1 mA	22		35	V
$V_{BR\,32}$	I_R = 1 mA, T_{amb} = 25°C	24		32	V
$I_{RM\,32}$	V_{RM} = 20 V			100	µA
$I_{RM\,32}$	V_{RM} = 20 V, T_{amb} = 25°C			10	µA
$V_{CL\,32}$	I_{PP} = 20 A (note 1)			40	V
α T	Temperature coefficient of V_{BR}			9	10^{-4}/°C
C_{32}	F = 1MHz V_R = 0 V		8000		pF

Note 1 : One pulse, see pulse definition in load dump test generator circuit.

Downloaded from Elcodis.com electronic components distributor

PRODUCT DESCRIPTION

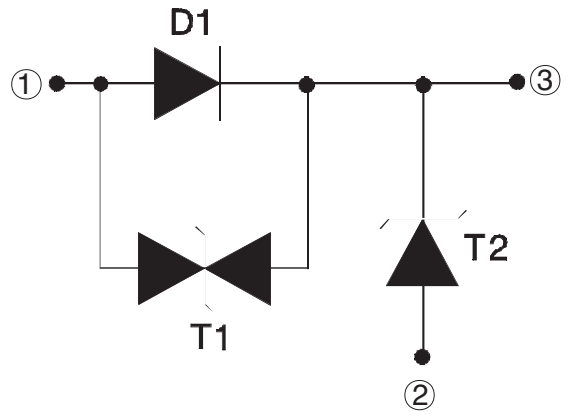

The RBO has 3 functions integrated on the same chip.

D1 : “Diode function” in order to protect against reversed battery operation.

T2 : “Transil function” in order to protect against positive surge generated by electric systems (ignition, relay. ...).

T1 : Protection for motor drive application (See below).

BASIC APPLICATION

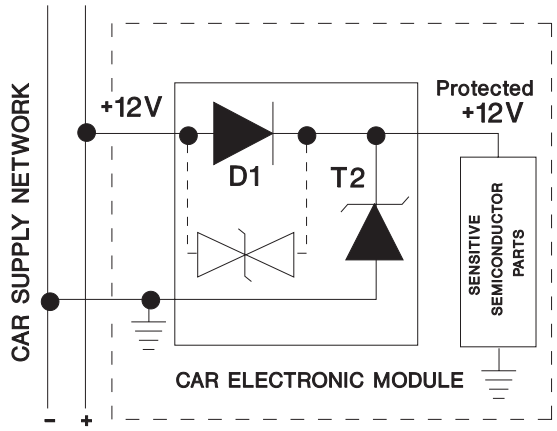

* The monolithic multi-function protection (RBO) has been developed to protect sensitive semiconductors in car electronic modules against both overvoltage and battery reverse.

* In addition, the RBO circuit prevents overvoltages generated by the module from affecting the car supply network.

MOTOR DRIVER APPLICATION

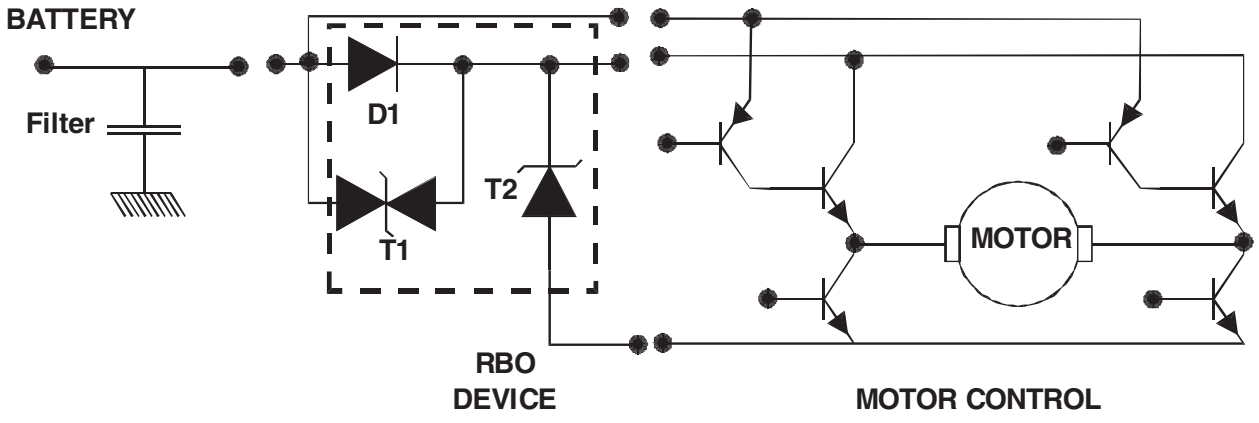

In this application, one half of the motor drive circuit is supplied through the “RBO” and is thus protected as per its basic function application.
The second part is connected directly to the “car supply network” and is protected as follows :
- For positive surges : T2 (clamping phase) and D1 in forward-biased.
- For negative surges : T1 (clamping phase) and T2 in forward-biased.

Downloaded from Elcodis.com electronic components distributor

PINOUT configuration in D^{2}PAK :

- Input (1) : Pin 1
- Output (3) : Pin 3
- Gnd (2) : Connected to base Tab

Marking : Logo, date code, RBO40-40G

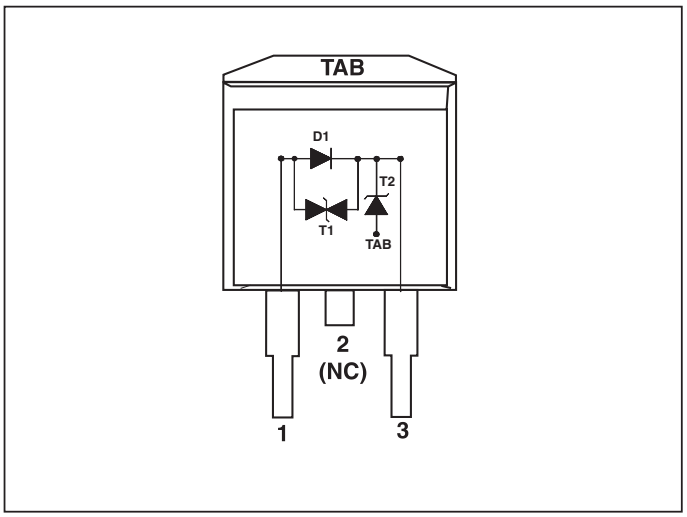

PINOUT configuration in TO220AB :

- Input (1) : Pin 1
- Output (3) : Pin 3
- GND (2) : Connected to base Tab

Marking : Logo, date code, RBO40-40T

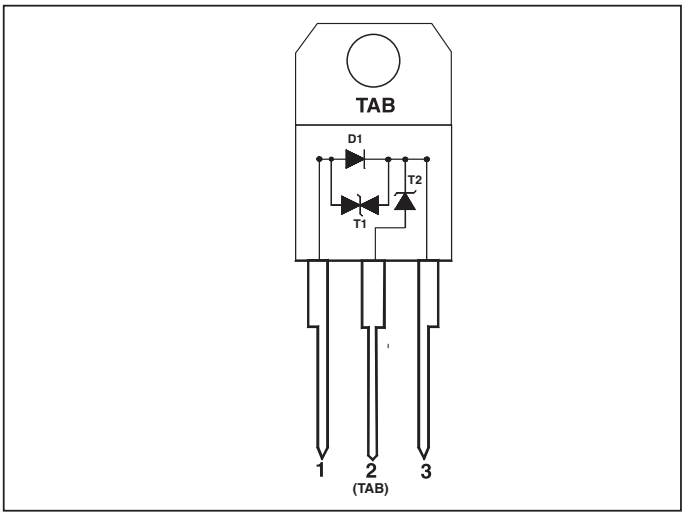

Downloaded from Elcodis.com electronic components distributor

LOAD DUMP TEST GENERATOR CIRCUIT (SCHAFFNER NSG 506 C). Issued from ISO / DTR 7637.

Open circuit (voltage curve)
(pulse test n°5)

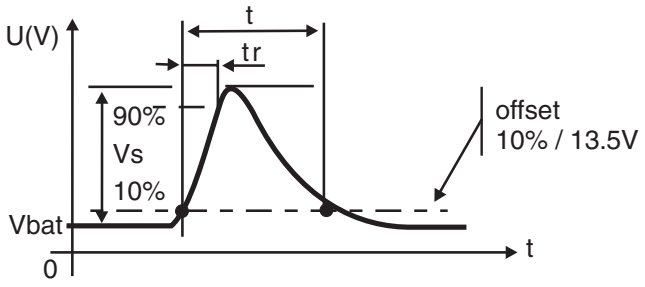

Corresponding current wave with D.U.T.

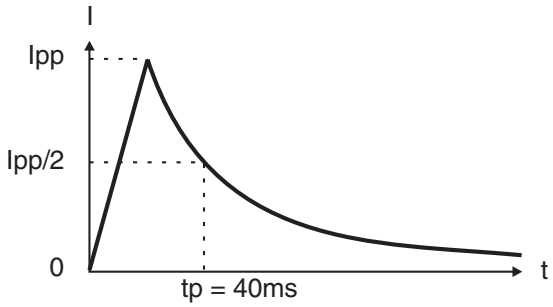

Impulse	N°5
Vs (V)	66.5
Vbat (V)	13.5
Ri (Ω)	2
t (ms)	200 (*)
tr (ms)	<10
Number	5

60s between each pulse

(*) Generator setting

CALIBRATION METHOD FOR SCHAFFNER NSG 506 C

1) With open circuit (generator is in open circuit):
- calibrate Vs

2) With short circuit (generator is in short circuit):
- calibrate Ri (Ri = 2Ω)

3) With D.U.T.
- calibrate tp (tp = 40ms @ Ipp/2)

Typical Voltage curve (open circuit)

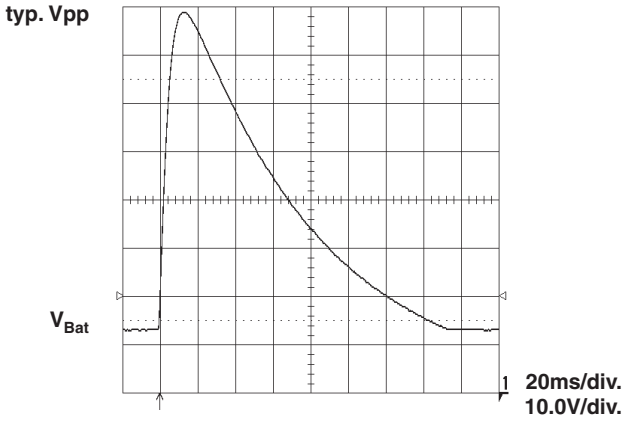

Typical Voltage and Current curve with D.U.T.

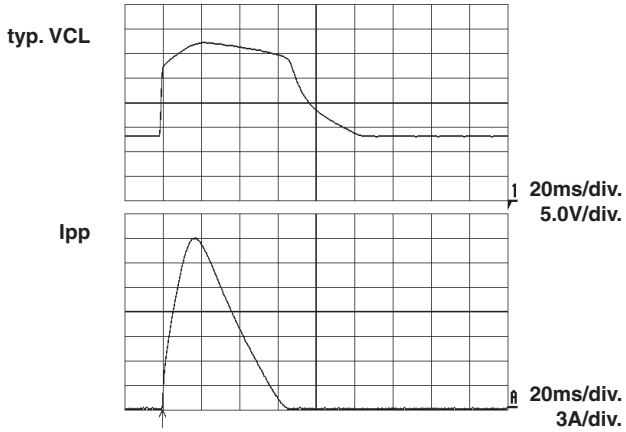

Downloaded from Elcodis.com electronic components distributor

Fig. 1 : Peak pulse power versus exponential pulse duration (Tj initial = 85°C).

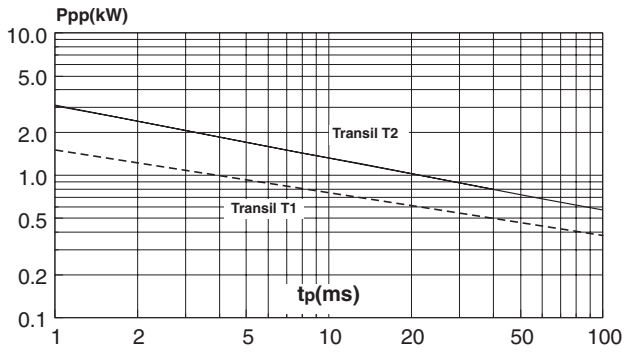

Fig. 2-1 : Clamping voltage versus peak pulse current (Tj initial = 85°C).

Exponential waveform tp = 40 ms and tp = 1 ms (TRANSIL T2).

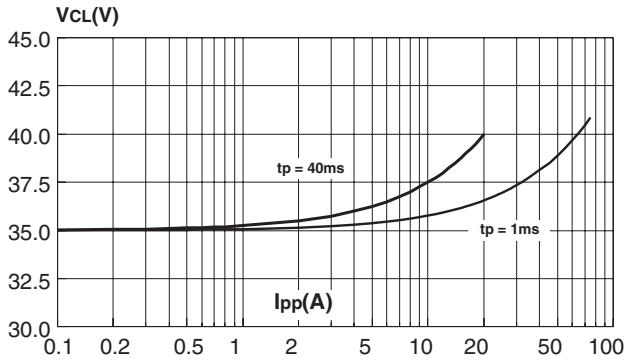

Fig. 2-2 : Clamping voltage versus peak pulse current (Tj initial = 85°C).

Exponential waveform tp = 1 ms and tp = 20 µs (TRANSIL T1).

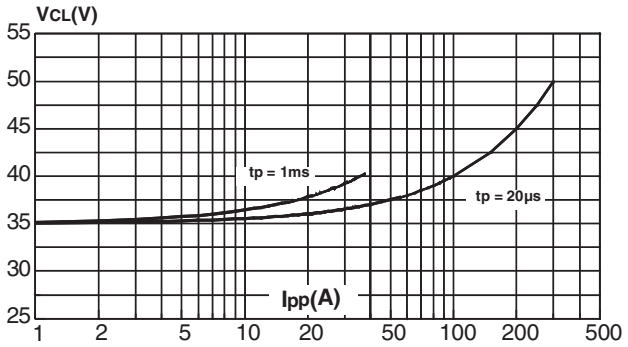

Fig. 3 : Relative variation of peak pulse power versus junction temperature.

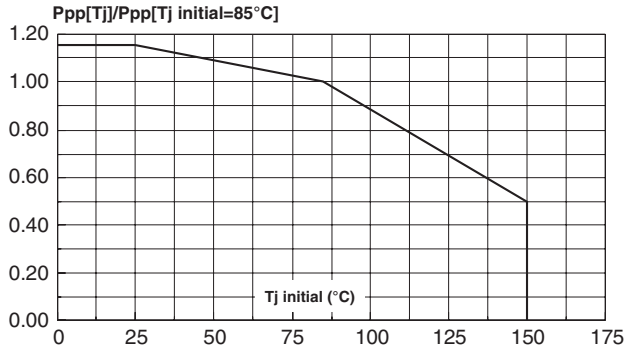

Downloaded from Elcodis.com electronic components distributor

Fig. 4 : Relative variation of thermal impedance junction to case versus pulse duration.

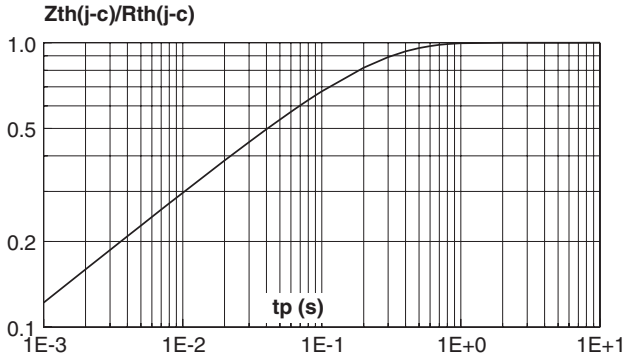

Fig. 5-1 : Peak forward voltage drop versus peak forward current (typical values) - (TRANSIL T2).

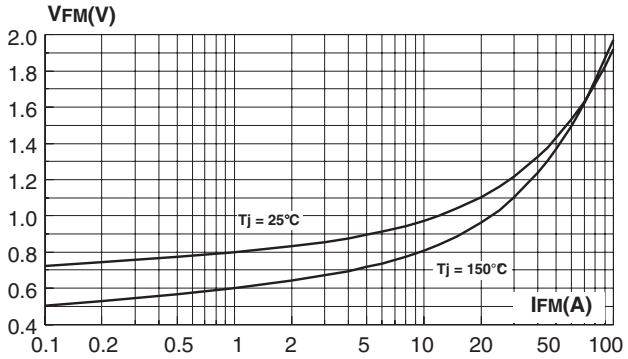

Fig. 5-2 : Peak forward voltage drop versus peak forward current (typical values) - (DIODE D1).

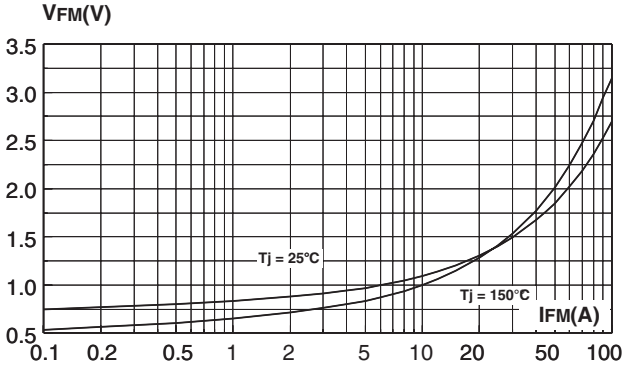

Fig. 6 : Relative variation of leakage current versus junction temperature.

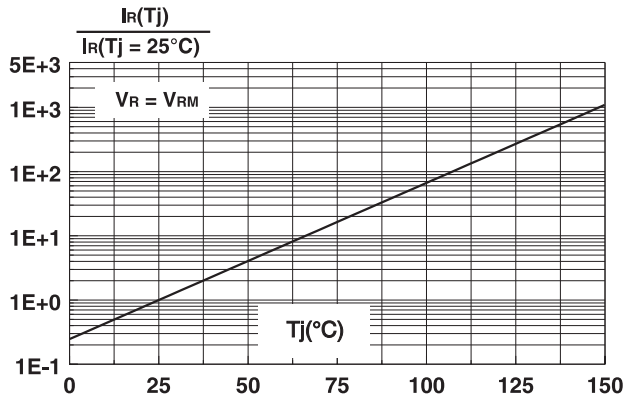

ORDERING INFORMATION

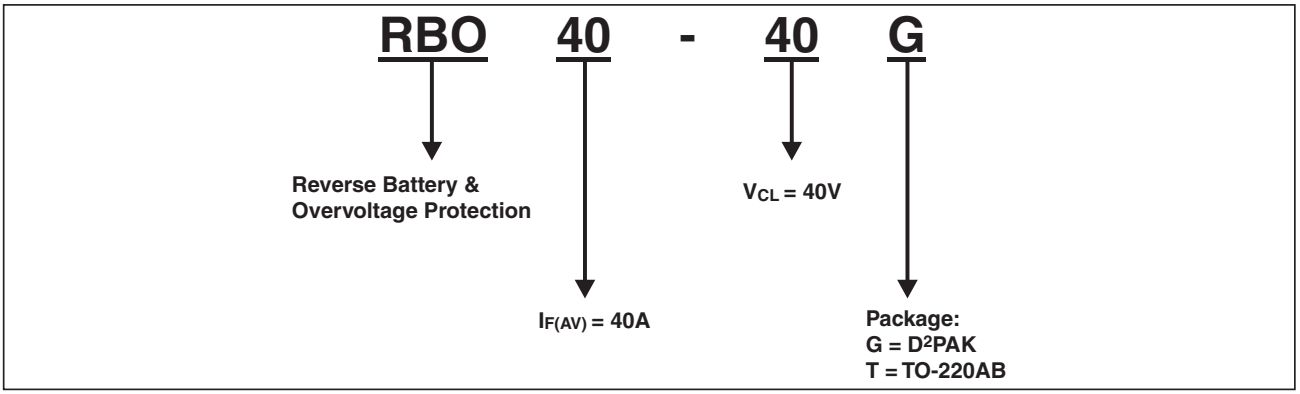

Downloaded from Elcodis.com electronic components distributor

PACKAGE MECHANICAL DATA

D^2PAK Plastic

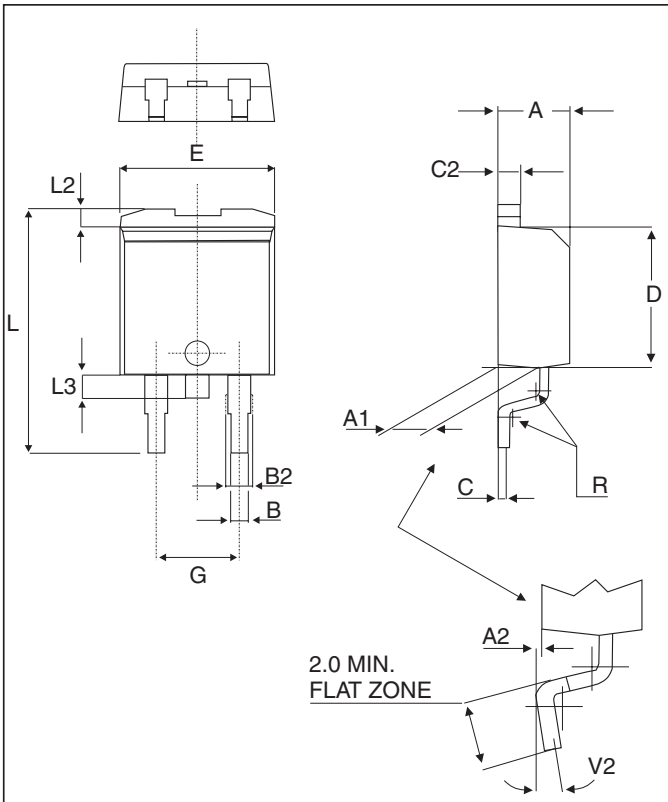

REF.	DIMENSIONS					
	Millimeters			Inches		
	Min.	Typ.	Max.	Min.	Typ.	Max.
A	4.30		4.60	0.169		0.181
A1	2.49		2.69	0.098		0.106
A2	0.03		0.23	0.001		0.009
B	0.70		0.93	0.027		0.037
B2		1.40			0.055	
C	0.45		0.60	0.017		0.024
C2	1.21		1.36	0.047		0.054
D	8.95		9.35	0.352		0.368
E	10.00		10.28	0.393		0.405
G	4.88		5.28	0.192		0.208
L	15.00		15.85	0.590		0.624
L2	1.27		1.40	0.050		0.055
L3	1.40		1.75	0.055		0.069
R		0.40			0.016	
V2	0°		8°	0°		8°

FOOT-PRINT (in millimeters)
D^2PAK

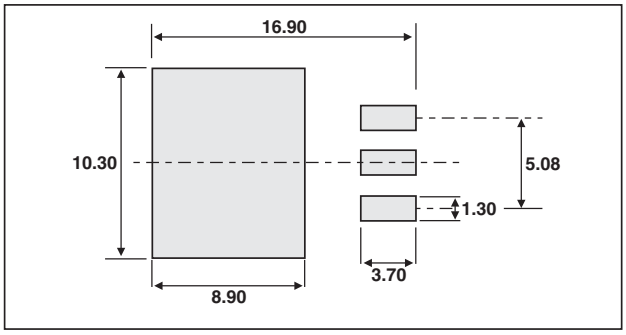

Downloaded from Elcodis.com electronic components distributor

PACKAGE MECHANICAL DATA

TO-220AB Plastic

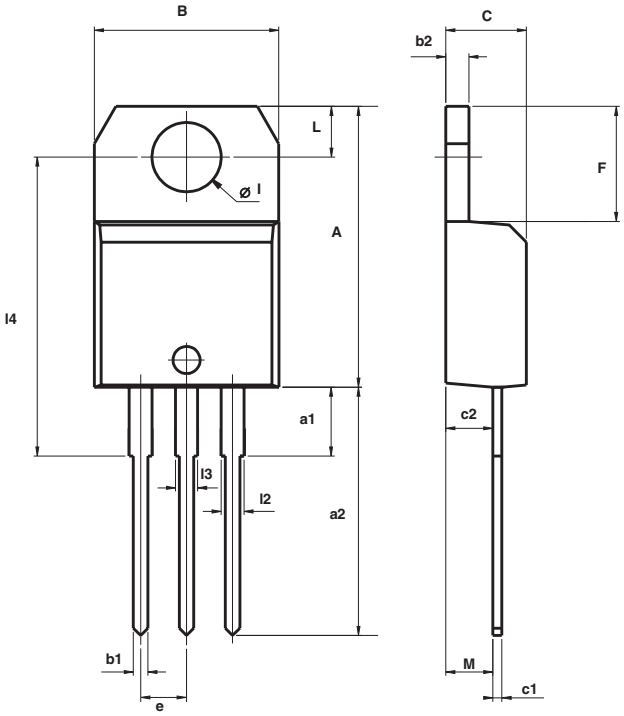

REF.	DIMENSIONS					
	Millimeters			Inches		
	Min.	Typ.	Max.	Min.	Typ.	Max.
A	15.20		15.90	0.598		0.625
a1		3.75			0.147	
a2	13.00		14.00	0.511		0.551
B	10.00		10.40	0.393		0.409
b1	0.61		0.88	0.024		0.034
b2	1.23		1.32	0.048		0.051
C	4.40		4.60	0.173		0.181
c1	0.49		0.70	0.019		0.027
c2	2.40		2.72	0.094		0.107
e	2.40		2.70	0.094		0.106
F	6.20		6.60	0.244		0.259
I	3.75		3.85	0.147		0.151
l4	15.80	16.40	16.80	0.622	0.646	0.661
L	2.65		2.95	0.104		0.116
l2	1.14		1.70	0.044		0.066
l3	1.14		1.70	0.044		0.066
M		2.60			0.102	

Information furnished is believed to be accurate and reliable. However, STMicroelectronics assumes no responsibility for the consequences of use of such information nor for any infringement of patents or other rights of third parties which may result from its use. No license is granted by implication or otherwise under any patent or patent rights of STMicroelectronics. Specifications mentioned in this publication are subject to change without notice. This publication supersedes and replaces all information previously supplied. STMicroelectronics products are not authorized for use as critical components in life support devices or systems without express written approval of STMicroelectronics.

The ST logo is a registered trademark of STMicroelectronics.

All other names are the property of their respective owners.

© 2005 STMicroelectronics - All rights reserved.

STMicroelectronics GROUP OF COMPANIES

Australia - Belgium - Brazil - Canada - China - Czech Republic - Finland - France - Germany - Hong Kong - India - Israel - Italy - Japan - Malaysia - Malta - Morocco - Singapore - Spain - Sweden - Switzerland - United Kingdom - United States

www.st.com

Downloaded from Elcodis.com electronic components distributor