REVISION			
REV.	DESCRIPTION	DATE	APPROVED

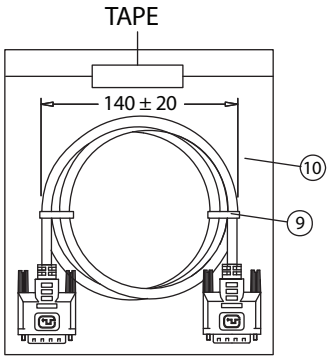

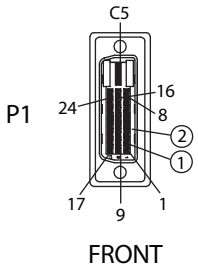

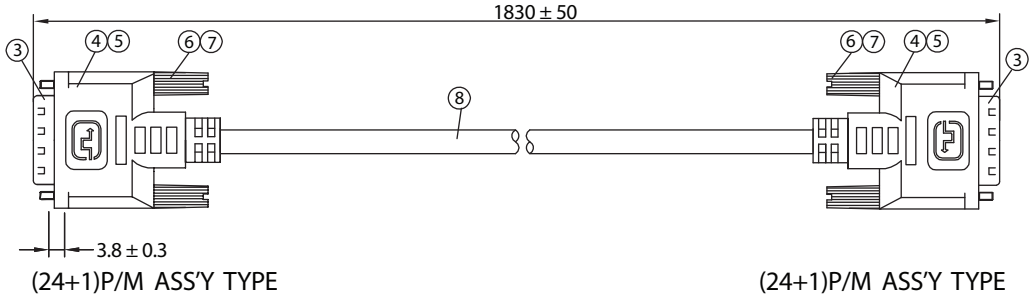

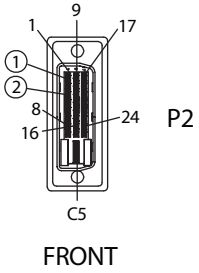

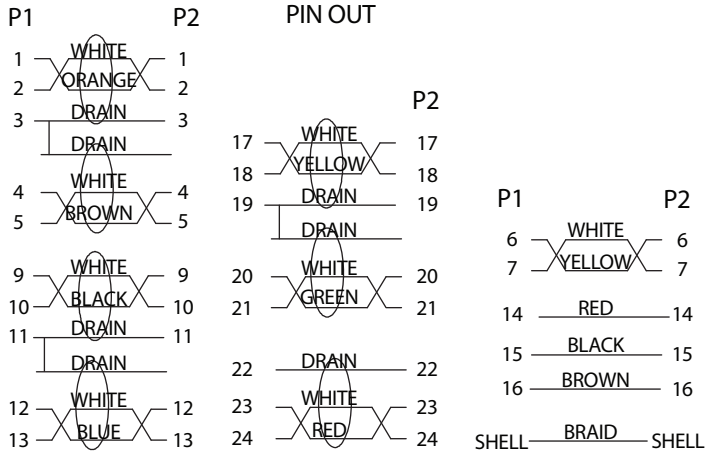

NOTES:

1. CABLE: UL20276
   (28AWGx1P+DW+FOIL)x7+28AWGx3C+28AWGx1P+MYLAR+FOIL+BD
   OD: 8.5 ± 0.3mm COLOR: BLACK
   PRINTING: "E166307 AWM 20276 28AWG 80°C 30V VW-1
   LOW VOLTAGE COMPUTER CABLE"
2. CONNECTORS: DVI(24+1)P/M-DVI(24+1)P/M
3. HOOD: ASS'Y TYPE, COVER COLOR: BLACK
4. CABLE ELECTRICAL TEST:
   <1>.100% OPEN SHORT & MISS WIRE TEST
   <2>.INSULATION RESISTANCE: DC400V 10M ohm MIN.
   <3>.CONDUCTOR RESISTANCE: 3 ohm MAX.
5. PACKING: 1PC/POLYBAG

No.	PARTS NAME	SPECIFICATION STANDARD	QTY	REMARKS
①	DVI (24+1)P/M-CONTACT	BRASS/GOLD PLATED SOLDER TYPE	50	
②	DVI (24+1)P/M-INSULATOR	THERMOPLASTIC/BLACK UL 94V-0	2	
③	DVI (24+1)P/M-SHELL	NICKEL PLATED	2	
④	CAN	STEEL TIN PLATED, ID: 9.0mm	2	
⑤	DVI (24+1)P/M-COVER	45P PVC/COLOR: BLACK	2	
⑥	THUMB SCREW	#4-40 2.8x45,mm NICKEL PLATED	4	
⑦	SCREW-MOLD	35P PVC/COLOR: BLACK	4	
⑧	CABLE DVI 24+1 UL20276	KL03007ABK01A	1	
⑨	MINI TIE	PE/BLACK	2	
⑩	POLYBAG	PE/0.08x180x200	1	

Dim range (mm)	Tolerance +/- (mm)
0-1	0.15
1-6	0.20
6-18	0.30
18-50	0.50
50-120	0.70
120-250	0.90
250-500	1.20

Qualtek Electronics Corp.
WCI DIVISION

Part Number: 1321017-06 RoHS Compliant

Description:
DVI (24+1)P/M - DVI (24+1)P/M

Drawn / Date	Checked / Date	Approved / Date
B. Grubb 01-03-07	01-03-07	JJH / 01-03-07